SECTION LAN
LAN SYSTEM

CONTENTS

CAN

PRECAUTIONS 3
Precautions for Supplemental Restraint System (SRS) “AIR BAG” and “SEAT BELT PRE-TENSIONER” 3
Precautions for Trouble Diagnosis 3
CAN SYSTEM 3
Precautions for Harness Repair 3
CAN SYSTEM 3
TROUBLE DIAGNOSES WORK FLOW 4
When Displaying CAN Communication System Errors 4
WHEN A MALFUNCTION IS DETECTED BY CAN COMMUNICATION SYSTEM 4
WHEN A MALFUNCTION IS DETECTED EXCEPT CAN COMMUNICATION SYSTEM 4
TROUBLE DIAGNOSIS FLOW CHART 5
Diagnosis Procedure 6
SELECTING CAN SYSTEM TYPE (HOW TO USE SPECIFICATION TABLE) 6
ACQUISITION OF DATA BY CONSULT-II 7
HOW TO USE CHECK SHEET TABLE 8
CAN Diagnostic Support Monitor 13
DESCRIPTION OF “CAN DIAG SUPPORT MNTR” SCREEN FOR ECM 13
DESCRIPTION OF “CAN DIAG SUPPORT MNTR” SCREEN FOR TCM 14
DESCRIPTION OF “CAN DIAG SUPPORT MNTR” SCREEN FOR ABS ACTUATOR AND ELECTRIC UNIT (CONTROL UNIT) 14
DESCRIPTION OF “CAN DIAG SUPPORT MNTR” SCREEN FOR VDC/TCS/ABS CONTROL UNIT 15
DESCRIPTION OF “CAN DIAG SUPPORT MNTR” SCREEN FOR AWD CONTROL UNIT ... 15
CAN COMMUNICATION 16
System Description 16
CAN Communication Unit 16
TYPE 1 16
TYPE 2 17
TYPE 3 18
TYPE 4 19
TYPE 5 20
CAN SYSTEM (TYPE 1) 22
Component Parts and Harness Connector Location... 22
Wiring Diagram — CAN — 23
Check Sheet 25
CHECK SHEET RESULTS (EXAMPLE) 26
Between TCM and ABS Actuator and Electric Unit (Control Unit) Circuit Inspection 31
ECM Circuit Inspection 32
TCM Circuit Inspection 33
ABS Actuator and Electric Unit (Control Unit) Circuit Inspection 33
Combination Meter Circuit Inspection 34
CAN Communication Circuit Inspection 35
CAN SYSTEM (TYPE 2) 39
Component Parts and Harness Connector Location... 39
Wiring Diagram — CAN — 40
Check Sheet 42
CHECK SHEET RESULTS (EXAMPLE) 43
Between ABS Actuator and Electric Unit (Control Unit) and AWD Control Unit Circuit Inspection 48
ECM Circuit Inspection 49
ABS Actuator and Electric Unit (Control Unit) Circuit Inspection 49
AWD Control Unit Circuit Inspection 50
Combination Meter Circuit Inspection 50
CAN Communication Circuit Inspection 51
CAN SYSTEM (TYPE 3) 55
Component Parts and Harness Connector Location... 55
Wiring Diagram — CAN — 56
Check Sheet 58
CHECK SHEET RESULTS (EXAMPLE) 59
Between TCM and ABS Actuator and Electric Unit

(Control Unit) Circuit Inspection 66
Between ABS Actuator and Electric Unit (Control Unit) and AWD Control Unit Circuit Inspection 67
ECM Circuit Inspection 68
TCM Circuit Inspection 69
ABS Actuator and Electric Unit (Control Unit) Circuit Inspection 69
AWD Control Unit Circuit Inspection 70
Combination Meter Circuit Inspection 70
CAN Communication Circuit Inspection 71
CAN SYSTEM (TYPE 4) 76
Component Parts and Harness Connector Location 76
Wiring Diagram — CAN — 77
Check Sheet 79
CHECK SHEET RESULTS (EXAMPLE) 80
Between VDC/TCS/ABS Control Unit and AWD Control Unit Circuit Inspection 86
ECM Circuit Inspection 87
VDC/TCS/ABS Control Unit Circuit Inspection 87
Steering Angle Sensor Circuit Inspection 88
AWD Control Unit Circuit Inspection 88
Combination Meter Circuit Inspection 89
CAN Communication Circuit Inspection 89
CAN SYSTEM (TYPE 5) 93
Component Parts and Harness Connector Location 93
Wiring Diagram — CAN — 94
Check Sheet 96
CHECK SHEET RESULTS (EXAMPLE) 97
Between TCM and VDC/TCS/ABS Control Unit Circuit Inspection 105
Between VDC/TCS/ABS Control Unit and AWD Control Unit Circuit Inspection 106
ECM Circuit Inspection 107
TCM Circuit Inspection 107
VDC/TCS/ABS Control Unit Circuit Inspection 108
Steering Angle Sensor Circuit Inspection 108
AWD Control Unit Circuit Inspection 109
Combination Meter Circuit Inspection 109
CAN Communication Circuit Inspection 110

PRECAUTIONS

PFP:00001

Precautions for Supplemental Restraint System (SRS) “AIR BAG” and “SEAT BELT PRE-TENSIONER”

AKS00BCH

The Supplemental Restraint System such as “AIR BAG” and “SEAT BELT PRE-TENSIONER”, used along with a front seat belt, helps to reduce the risk or severity of injury to the driver and front passenger for certain types of collision. Information necessary to service the system safely is included in the SRS and SB section of this Service Manual.

WARNING:

- **To avoid rendering the SRS inoperative, which could increase the risk of personal injury or death in the event of a collision which would result in air bag inflation, all maintenance must be performed by an authorized NISSAN/INFINITI dealer.**
- **Improper maintenance, including incorrect removal and installation of the SRS, can lead to personal injury caused by unintentional activation of the system. For removal of Spiral Cable and Air Bag Module, see the SRS section.**
- **Do not use electrical test equipment on any circuit related to the SRS unless instructed to in this Service Manual. SRS wiring harnesses can be identified by yellow and/or orange harnesses or harness connectors.**

Precautions for Trouble Diagnosis

AKS00BCI

CAN SYSTEM

- Do not apply voltage of 7.0 V or higher to the measurement terminals.
- Use the tester with its open terminal voltage being 7.0 V or less.
- Be sure to turn ignition switch off and disconnect battery cable at negative terminal before checking the circuit.

Precautions for Harness Repair

AKS00BCJ

CAN SYSTEM

- Solder the repaired parts, and wrap with tape. [Frays of twisted line must be within 110 mm (4.33 in)]

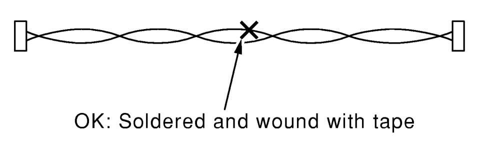

PKIA0306E

- Do not perform bypass wire connections for the repair parts. (The spliced wire will become separated and the characteristics of twisted line will be lost.)

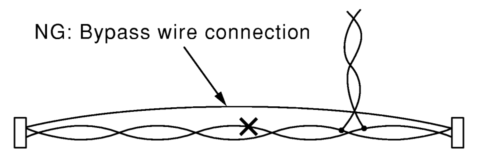

PKIA0307E

TROUBLE DIAGNOSES WORK FLOW

PFP:00004

When Displaying CAN Communication System Errors

AKS00BQF

WHEN A MALFUNCTION IS DETECTED BY CAN COMMUNICATION SYSTEM

- CAN communication line is open. (CAN H, CAN L, or both)
- CAN communication line is shorted. (Ground, between CAN lines, or other harnesses)
- The areas related to CAN communication of unit is malfunctioning.

WHEN A MALFUNCTION IS DETECTED EXCEPT CAN COMMUNICATION SYSTEM

- Removal and installation of parts: When the units that perform CAN communication or the sensors related to CAN communication are removed and installed, malfunction may be detected (or DTC other than CAN communication may be detected).
- Fuse blown out (removed): CAN communication of the unit may be stopped at such time.
- Low voltage: If the voltage decreases because of battery discharge when IGN is ON, malfunction may be detected by self-diagnosis according to the units.

TROUBLE DIAGNOSIS FLOW CHART

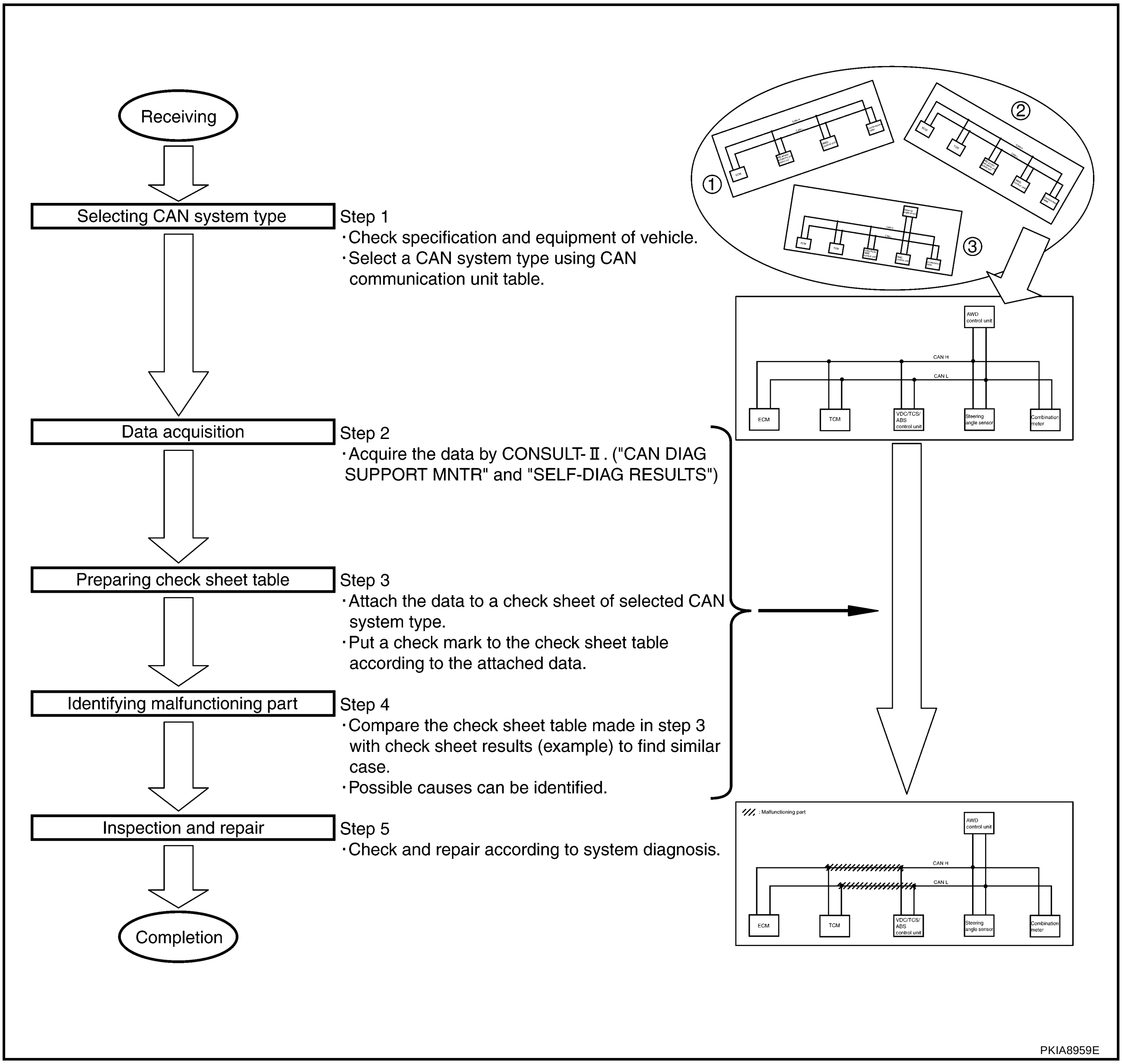

- Step 1: Refer to LAN-6, "SELECTING CAN SYSTEM TYPE (HOW TO USE SPECIFICATION TABLE)" .
- Step 2: Refer to LAN-7, "ACQUISITION OF DATA BY CONSULT-II" .
- Step 3: Refer to LAN-8, "HOW TO USE CHECK SHEET TABLE" .
- Step 4: Refer to LAN-9, "Example of Filling in Check Sheet When Initial Conditions Are Reproduced" .
- Step 5: Check and repair according to system diagnosis.

Diagnosis Procedure

AKS00BQG

SELECTING CAN SYSTEM TYPE (HOW TO USE SPECIFICATION TABLE)

Determine CAN system type from the equipment of the vehicle to select applicable check sheet.

(Example) Wagon/AWD/QR25DE/AT/VDC

CAN Communication Unit

Go to CAN system, when selecting your CAN system type from the following table.

Body type	Wagon				
Axle	2WD	AWD			
Engine	QR25DE				
Transmission	A/T	M/T	A/T	M/T	A/T
Brake control	ABS			VDC	
CAN system type	1	2	3	4	5
CAN system trouble diagnosis	XX-XX	XX-XX	XX-XX	XX-XX	XX-XX

Check basic specification of the vehicle.

Which number is selected when sequentially selecting from the top of the specification table?
The number is "CAN system type" of the applicable vehicle.

In the case of this example:
It corresponds to type 5.

PKIA8960E

ACQUISITION OF DATA BY CONSULT-II

Attach the data acquired by CONSULT-II on the check sheet determined according to CAN system type.

Check sheet table

SELECT SYSTEM screen	CAN DIAG SUPPORT MNTR								SELF-DIAG RESULTS	
	Initial diagnosis	Transmit diagnosis	Receive diagnosis							
			ECM	TCM	VDC/TCS/ABS	STRG	AWD/4WD	METER/M&A		
ENGINE	NG	UNKWN	–	UNKWN	UNKWN	–	–	UNKWN	CAN COMM CIRCUIT (U1000)	CAN COMM CIRCUIT (U1001)
A/T	NG	UNKWN	UNKWN	–	UNKWN	–	–	UNKWN	CAN COMM CIRCUIT (U1000)	–
ABS	NG	UNKWN	UNKWN	–	–	UNKWN	UNKWN	–	CAN COMM CIRCUIT (U1000)	–
ALL MODE AWD/4WD	NG	UNKWN	UNKWN	–	UNKWN	–	–	–	CAN COMM CIRCUIT (U1000)	–

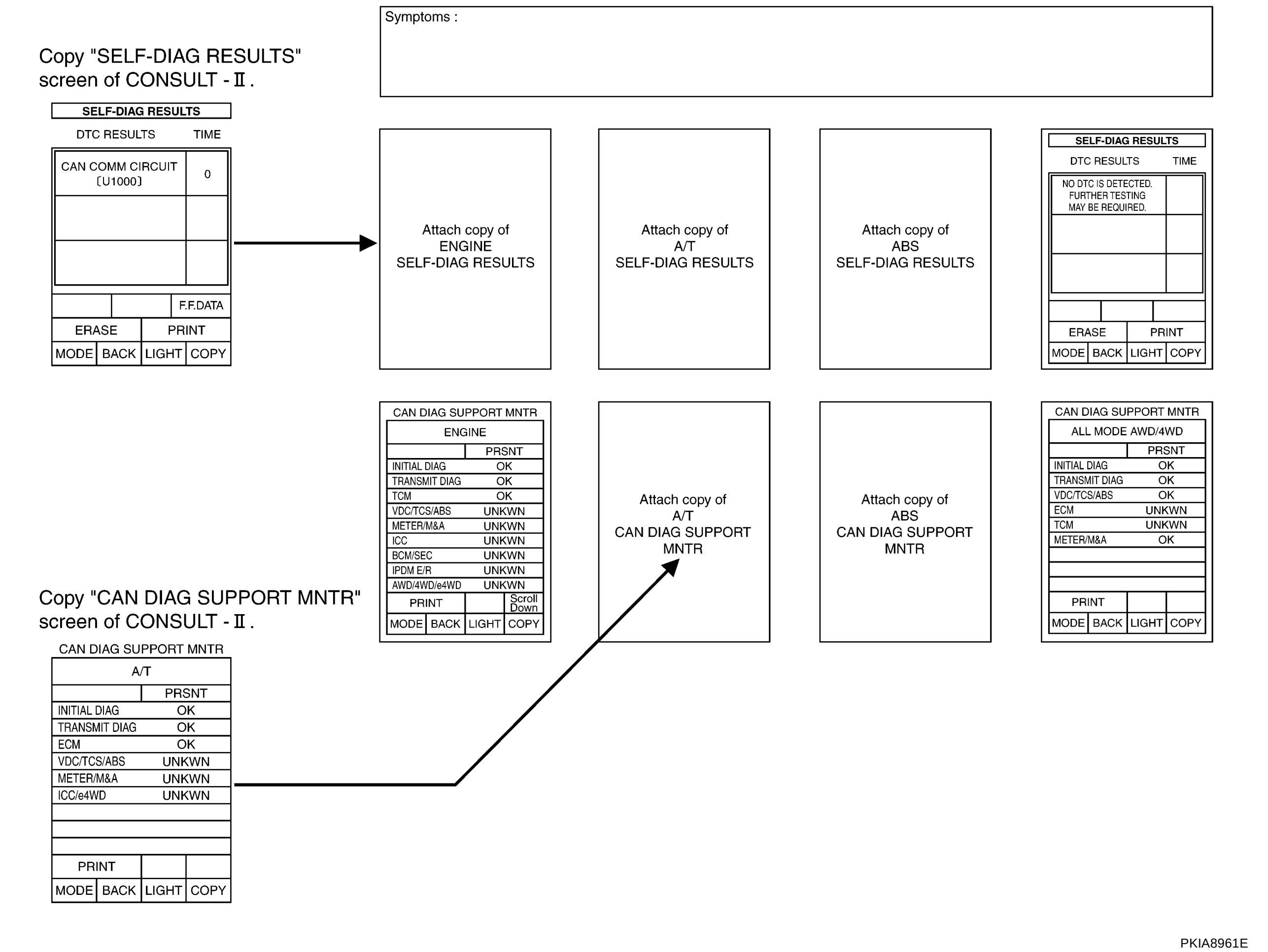

HOW TO USE CHECK SHEET TABLE

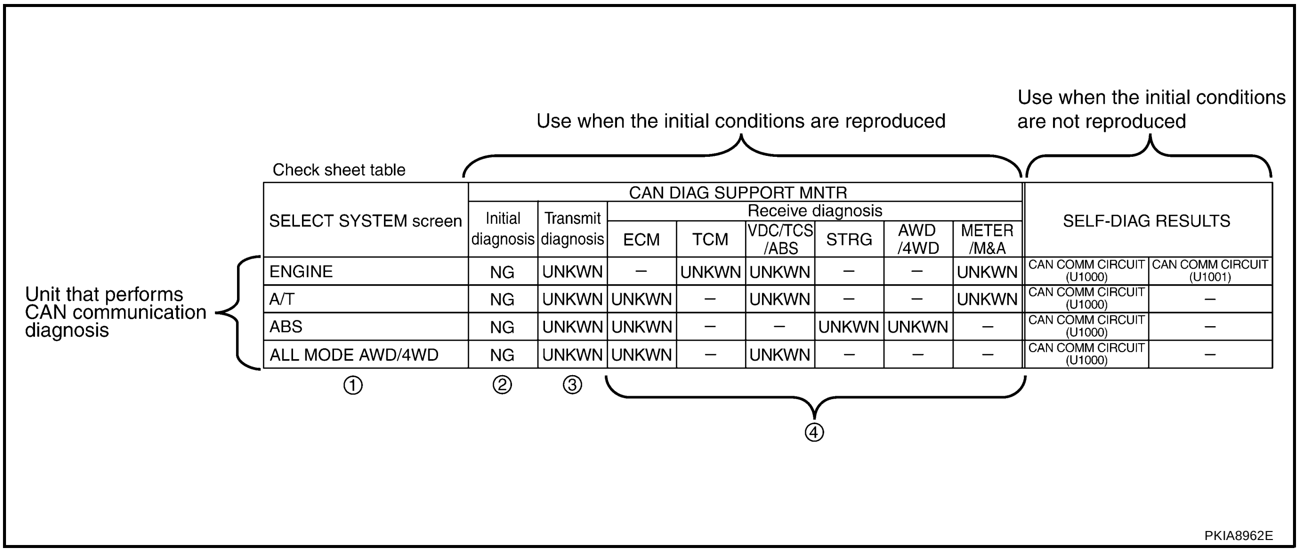

SELECT SYSTEM screen	CAN DIAG SUPPORT MNTR									SELF-DIAG RESULTS	
	Initial diagnosis	Transmit diagnosis	Receive diagnosis								
			ECM	TCM	VDC/TCS /ABS	STRG	AWD /4WD	METER /M&A			
ENGINE	NG	UNKWN	–	UNKWN	UNKWN	–	–	UNKWN	CAN COMM CIRCUIT (U1000)	CAN COMM CIRCUIT (U1001)
A/T	NG	UNKWN	UNKWN	–	UNKWN	–	–	UNKWN	CAN COMM CIRCUIT (U1000)	–
ABS	NG	UNKWN	UNKWN	–	–	UNKWN	UNKWN	–	CAN COMM CIRCUIT (U1000)	–
ALL MODE AWD/4WD	NG	UNKWN	UNKWN	–	UNKWN	–	–	–	CAN COMM CIRCUIT (U1000)	–

1. Unit names displayed on CONSULT-II
2. “NG”: Display “NG” when malfunction is detected in the initial diagnosis of the diagnosed unit. Replace the unit if “NG” is displayed.
   “–”: Column not used (Initial diagnosis is not performed.)
3. “UNKWN”: Display “UNKWN” when the diagnosed unit does not transmit the data normally. Put a check mark to it if “UNKWN” is displayed on CONSULT-II.
4. “UNKWN”: Display “UNKWN” when the diagnosed unit does not receive the data normally. Put a check mark to it if “UNKWN” is displayed on CONSULT-II.
   “–”: Column not used (It is not necessary for CAN communication trouble diagnosis.)

NOTE:
CAN communication diagnosis checks if CAN communication works normally. (Contents of data are not diagnosed.)

- Refer to LAN-9, "Example of Filling in Check Sheet When Initial Conditions Are Reproduced" when the initial conditions are reproduced.
- Refer to LAN-11, "Example of Filling in Check Sheet When Initial Conditions Are Not Reproduced" when the initial conditions are not reproduced.

Example of Filling in Check Sheet When Initial Conditions Are Reproduced

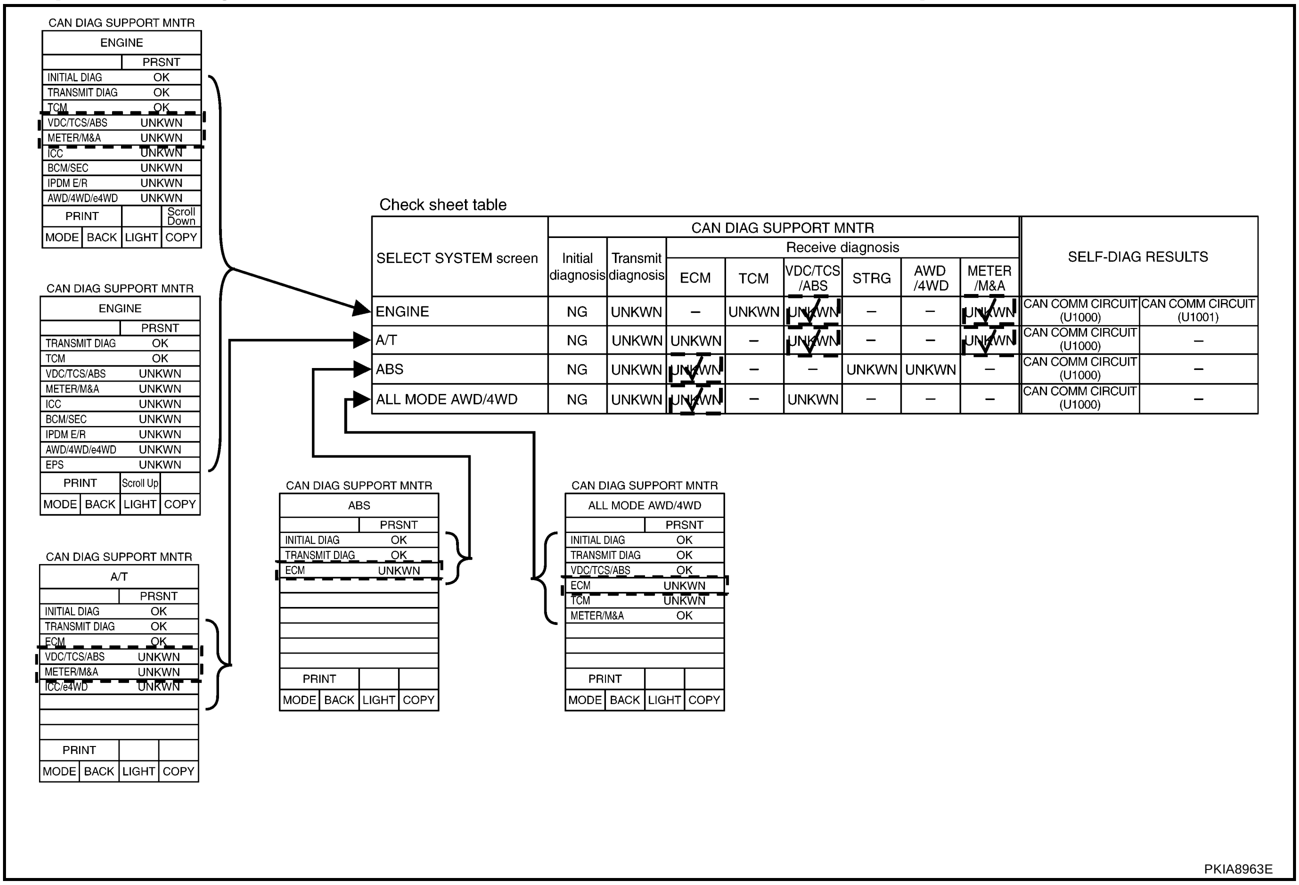

1. Confirm the unit name that “UNKWN” is displayed from the copy of “CAN DIAG SUPPORT MNTR” screen of “ENGINE” attached to the check sheet, and then put a check mark to the check sheet table.

   NOTE:
   In “CAN DIAG SUPPORT MNTR” screen, “UNKWN” is displayed on “VDC/TCS/ABS”, “METER/M&A”, “ICC”, “BCM/SEC”, “IPDM E/R”, “AWD/4WD/e4WD” and “EPS”. But put a check mark to “VDC/TCS/ABS” and “METER/M&A” because “UNKWN” is listed on the column of reception diagnosis of the check sheet table.

2. Confirm the unit name that “UNKWN” is displayed on the copy of “CAN DIAG SUPPORT MNTR” screen of “A/T”, “ABS”, and “ALL MODE AWD/4WD” as well as “ENGINE”. And then, put a check mark to the check sheet table.

   NOTE:
   - For “A/T”, “UNKWN” is displayed on “VDC/TCS/ABS”, “METER/M&A” and “ICC/e4WD”. Put a check mark to “VDC/TCS/ABS” and “METER/M&A” columns of reception diagnosis on the check sheet table. (It is not necessary to put a check mark for “ICC/e4WD”, which is not listed on the check sheet table.)
   - For “ABS”, “UNKWN” is displayed on “ECM”. Put a check mark to it.
   - For “ALL MODE AWD/4WD”, “UNKWN” is displayed on “ECM” and “TCM”. Put a check mark to “ECM” columns of reception diagnosis on the check sheet table. (It is not necessary to put a check mark for “TCM”, which is not listed on the check sheet table.)

The arranged results of CAN diagnosis support monitor

Check sheet table

SELECT SYSTEM screen	CAN DIAG SUPPORT MNTR								SELF-DIAG RESULTS	
	Initial diagnosis	Transmit diagnosis	Receive diagnosis							
			ECM	TCM	VDC/TCS /ABS	STRG	AWD /4WD	METER /M&A		
ENGINE	NG	UNKWN	–	UNKWN	UNKWN ✓	–	–	UNKWN ✓	CAN COMM CIRCUIT (U1000)	CAN COMM CIRCUIT (U1001)
A/T	NG	UNKWN	UNKWN	–	UNKWN ✓	–	–	UNKWN ✓	CAN COMM CIRCUIT (U1000)	–
ABS	NG	UNKWN	UNKWN ✓	–	–	UNKWN	UNKWN	–	CAN COMM CIRCUIT (U1000)	–
ALL MODE AWD/4WD	NG	UNKWN	UNKWN ✓	–	UNKWN	–	–	–	CAN COMM CIRCUIT (U1000)	–

Choose similar indications between the results of CAN diagnosis support monitor and the results of the check sheet. Malfunctioning parts are found.

Case 1
Check harness between TCM and VDC/TCS/ABS control unit.

Check sheet results (example)

SELECT SYSTEM screen	CAN DIAG SUPPORT MNTR								SELF-DIAG RESULTS	
	Initial diagnosis	Transmit diagnosis	Receive diagnosis							
			ECM	TCM	VDC/TCS /ABS	STRG	AWD /4WD	METER /M&A		
ENGINE	NG	UNKWN	–	UNKWN	UNKWN ✓	–	–	UNKWN ✓	CAN COMM CIRCUIT (U1000)	CAN COMM CIRCUIT (U1001) ✓
A/T	NG	UNKWN	UNKWN	–	–	–	–	–	–	–
ABS	NG	UNKWN	UNKWN ✓	–	–	UNKWN	UNKWN	–	CAN COMM CIRCUIT (U1000) ✓	–
ALL MODE AWD/4WD	NG	UNKWN	UNKWN ✓	–	UNKWN	–	–	–	CAN COMM CIRCUIT (U1000) ✓	–

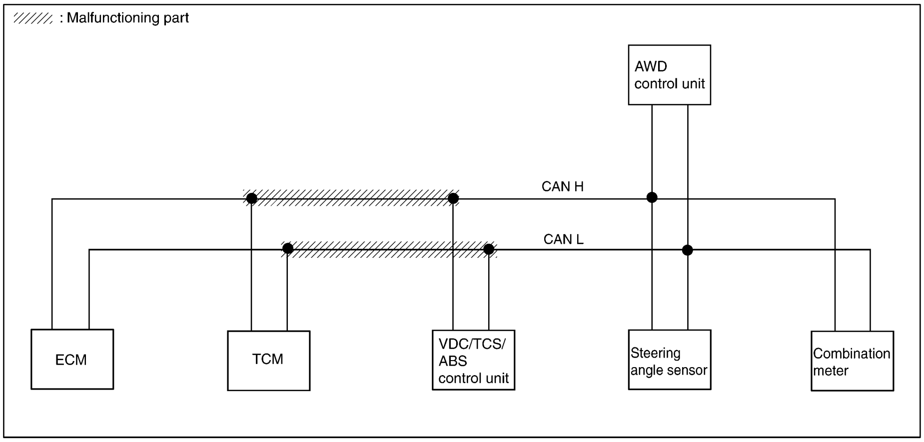

PKIA8964E

NOTE:
There is a check mark both in “VDC/TCS/ABS” and “METER/M&A” of “A/T” in “The arranged results of CAN diagnosis support monitor” sheet. Also, there is a mark of “–” both in “VDC/TCS/ABS” and “METER/M&A” of “A/T” in the check sheet results (example). Therefore, ignore a check mark both in “VDC/TCS/ABS” and “METER/M&A” of “A/T” in “The arranged results of CAN diagnosis support monitor” sheet.

3. Perform system diagnosis for possible causes identified.
4. Perform diagnosis again after inspection and repair. Make sure that repair is completely performed, and then end the procedure.

Start CAN system trouble diagnosis if this procedure can be confirmed. LAN-16, "CAN Communication Unit"

Example of Filling in Check Sheet When Initial Conditions Are Not Reproduced

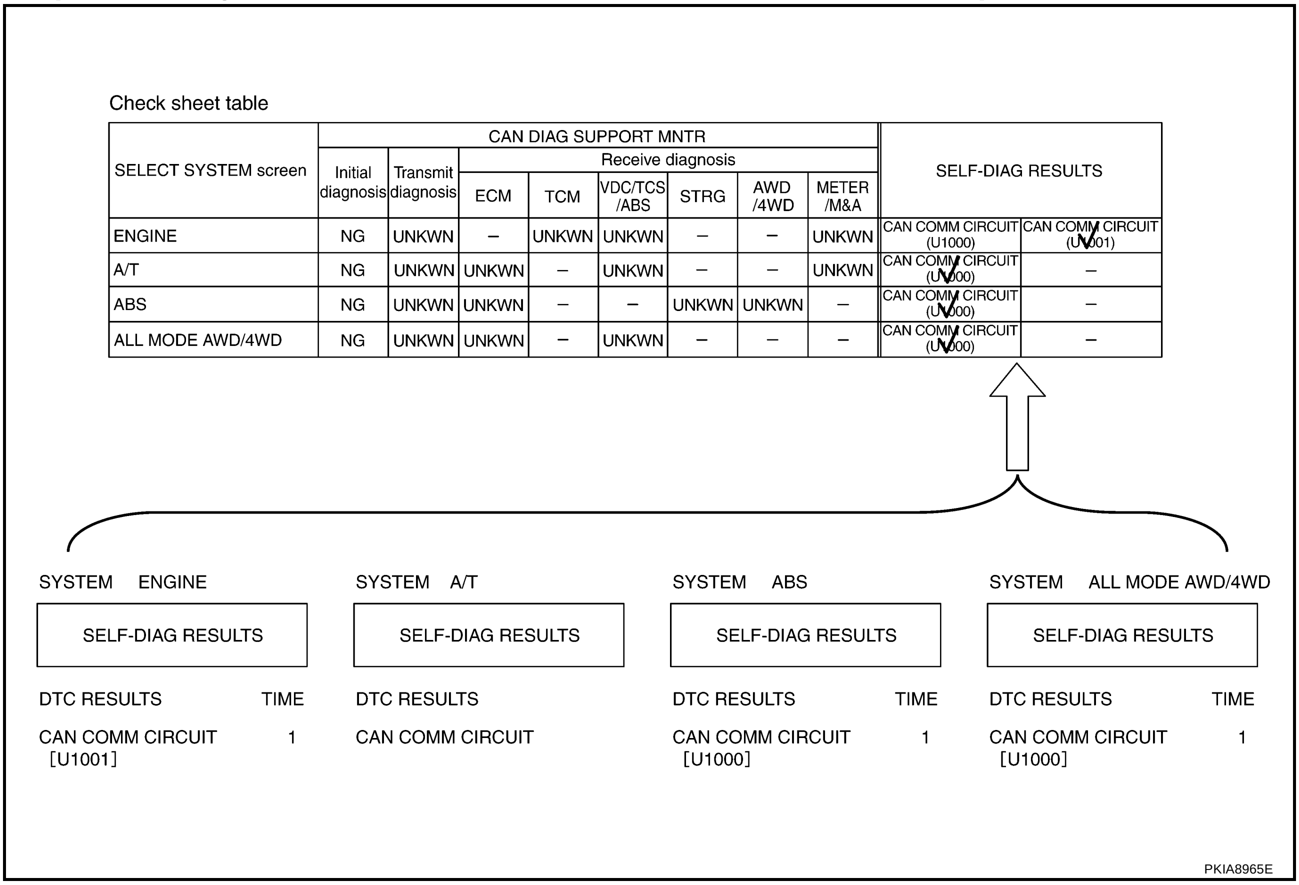

Check sheet table

SELECT SYSTEM screen	CAN DIAG SUPPORT MNTR								SELF-DIAG RESULTS	
	Initial diagnosis	Transmit diagnosis	Receive diagnosis							
			ECM	TCM	VDC/TCS /ABS	STRG	AWD /4WD	METER /M&A		
ENGINE	NG	UNKWN	–	UNKWN	UNKWN	–	–	UNKWN	CAN COMM CIRCUIT (U1000)	CAN COMM CIRCUIT (U1001) ✓
A/T	NG	UNKWN	UNKWN	–	UNKWN	–	–	UNKWN	CAN COMM CIRCUIT (U1000) ✓	–
ABS	NG	UNKWN	UNKWN	–	–	UNKWN	UNKWN	–	CAN COMM CIRCUIT (U1000) ✓	–
ALL MODE AWD/4WD	NG	UNKWN	UNKWN	–	UNKWN	–	–	–	CAN COMM CIRCUIT (U1000) ✓	–

1. See “SELF-DIAG RESULTS” of all units attached to the check sheet. If “CAN COMM CIRCUIT”, “CAN COMM CIRCUIT [U1000]” or “CAN COMM CIRCUIT [U1001]” is displayed, put a check mark to the applicable column of self-diagnostic results of the check sheet table.

NOTE:

- For “ENGINE”, “CAN COMM CIRCUIT [U1001]” are displayed. Put a check mark to it.
- For “A/T”, “CAN COMM CIRCUIT” is displayed. Put a check mark to it.
- For “ABS”, “CAN COMM CIRCUIT [U1000]” is displayed. Put a check mark to it.
- For “ALL MODE AWD/4WD”, “CAN COMM CIRCUIT [U1000]” is displayed. Put a check mark to it.

The arranged results of self-diagnosis

Check sheet table

SELECT SYSTEM screen	CAN DIAG SUPPORT MNTR: Initial diagnosis	Transmit diagnosis	Receive diagnosis: ECM	TCM	VDC/TCS /ABS	STRG	AWD /4WD	METER /M&A	SELF-DIAG RESULTS	
ENGINE	NG	UNKWN	–	UNKWN	UNKWN	–	–	UNKWN	CAN COMM CIRCUIT (U1000)	CAN COMM CIRCUIT (U1001) ✓
A/T	NG	UNKWN	UNKWN	–	UNKWN	–	–	UNKWN	CAN COMM CIRCUIT (U1000) ✓	–
ABS	NG	UNKWN	UNKWN	–	–	UNKWN	UNKWN	–	CAN COMM CIRCUIT (U1000) ✓	–
ALL MODE AWD/4WD	NG	UNKWN	UNKWN	–	UNKWN	–	–	–	CAN COMM CIRCUIT (U1000) ✓	–

When the arranged results of self-diagnosis and check sheet results (example) are corresponding, possible causes can be selected.

Case 2
Check harness between VDC/TCS/ABS control unit and AWD control unit.

SELECT SYSTEM screen	CAN DIAG SUPPORT MNTR: Initial diagnosis	Transmit diagnosis	Receive diagnosis: ECM	TCM	VDC/TCS /ABS	STRG	AWD /4WD	METER /M&A	SELF-DIAG RESULTS	
ENGINE	NG	UNKWN	–	UNKWN	UNKWN	–	–	UNKWN ✓	CAN COMM CIRCUIT (U1000)	CAN COMM CIRCUIT (U1001) ✓
A/T	NG	UNKWN	UNKWN	–	UNKWN	–	–	–	–	–
ABS	NG	UNKWN	UNKWN	–	–	UNKWN ✓	UNKWN ✓	–	CAN COMM CIRCUIT (U1000) ✓	–
ALL MODE AWD/4WD	NG	UNKWN	UNKWN ✓	–	UNKWN ✓	–	–	–	CAN COMM CIRCUIT (U1000) ✓	–

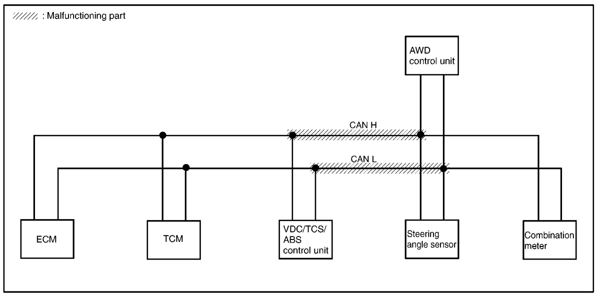

Case 5
Check VDC/TCS/ABS control unit circuit.

SELECT SYSTEM screen	CAN DIAG SUPPORT MNTR: Initial diagnosis	Transmit diagnosis	Receive diagnosis: ECM	TCM	VDC/TCS /ABS	STRG	AWD /4WD	METER /M&A	SELF-DIAG RESULTS	
ENGINE	NG	UNKWN	–	UNKWN	UNKWN ✓	–	–	UNKWN	CAN COMM CIRCUIT (U1000)	CAN COMM CIRCUIT (U1001) ✓
A/T	NG	UNKWN	UNKWN	–	–	–	–	UNKWN	–	–
ABS	NG ✓	UNKWN ✓	UNKWN ✓	–	–	UNKWN ✓	UNKWN ✓	–	CAN COMM CIRCUIT (U1000) ✓	–
ALL MODE AWD/4WD	NG	UNKWN	UNKWN	–	UNKWN ✓	–	–	–	CAN COMM CIRCUIT (U1000) ✓	–

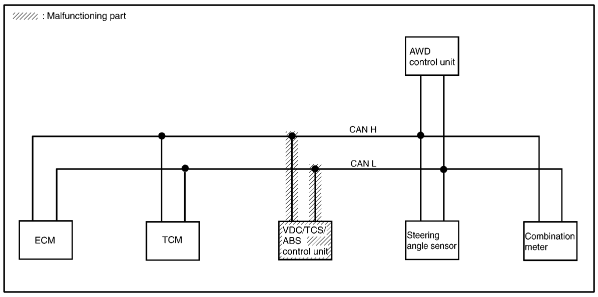

PKIA8966E

NOTE:
There is a check mark in “CAN COMM CIRCUIT (U1000)” of “A/T” in “The arranged results of self-diagnosis” sheet. Also, there is a mark of “–” in “CAN COMM CIRCUIT (U1000)” of “A/T” in “The arranged results of self-diagnosis” sheet. Therefore, ignore a check mark in “CAN COMM CIRCUIT (U1000)” of “A/T” in “The arranged results of self-diagnosis” sheet.

2. For the selected possible causes, it is expected that malfunctions have been found in the past.

CAN Diagnostic Support Monitor

AKS00BQH

DESCRIPTION OF “CAN DIAG SUPPORT MNTR” SCREEN FOR ECM

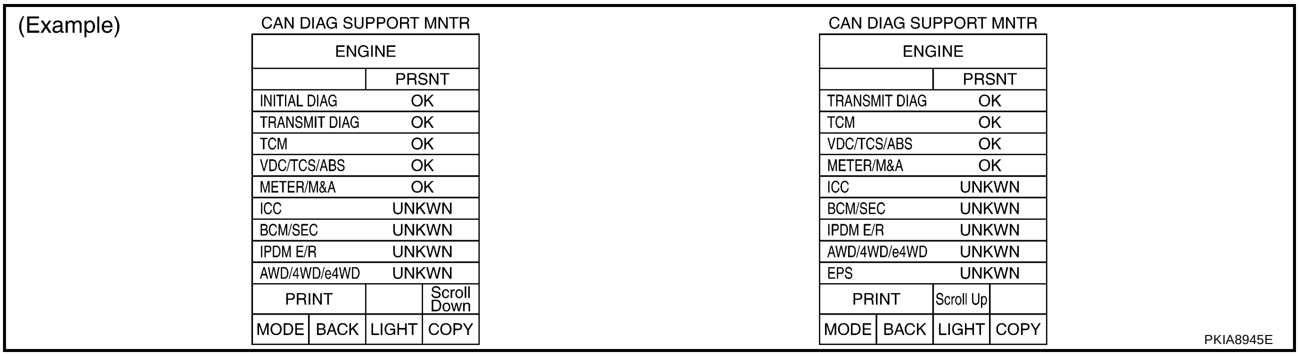

“SELECT SYSTEM” screen	“CAN DIAG SUPPORT MNTR” screen	Description	Present
ENGINE	INITIAL DIAG	Make sure that microcomputer in ECU works normally.	OK/NG
	TRANSMIT DIAG	Make sure of normal transmission.	OK/UNKWN
	TCM	Make sure of normal reception from TCM.	OK/UNKWN
	VDC/TCS/ABS	VDC/TCS/ABS is not diagnosed. (ABS models)	UNKWN
		Make sure of normal reception from VDC/TCS/ABS control unit. (VDC models)	OK/UNKWN
	METER/M&A	Make sure of normal reception from combination meter.	OK/UNKWN
	ICC	ICC is not diagnosed.	UNKWN
	BCM/SEC	BCM/SEC is not diagnosed.	UNKWN
	IPDM E/R	IPDM E/R is not diagnosed.	UNKWN
	AWD/4WD/e4WD	AWD/4WD/e4WD is not diagnosed.	UNKWN
	EPS	EPS is not diagnosed.	UNKWN

Display Results (Present)

- OK: Normal
- NG: Malfunction
- UNKWN: The diagnosed unit does not transmit or receive the applicable data normally.

DESCRIPTION OF “CAN DIAG SUPPORT MNTR” SCREEN FOR TCM

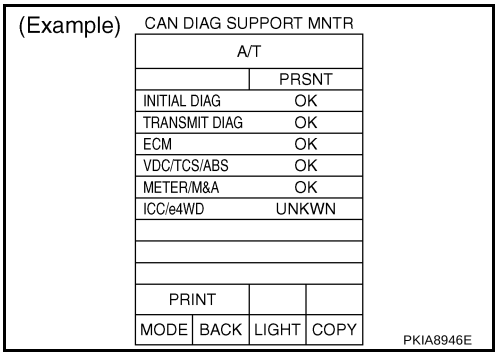

“SELECT SYSTEM” screen	“CAN DIAG SUPPORT MNTR” screen	Description	Present
A/T	INITIAL DIAG	Make sure that microcomputer in ECU works normally.	OK/NG
	TRANSMIT DIAG	Make sure of normal transmission.	OK/UNKWN
	ECM	Make sure of normal reception from ECM.	OK/UNKWN
	VDC/TCS/ABS	VDC/TCS/ABS is not diagnosed. (ABS models)	UNKWN
		Make sure of normal reception from VDC/TCS/ABS control unit. (VDC models)	OK/UNKWN
	METER/M&A	Make sure of normal reception from combination meter.	OK/UNKWN
	ICC/e4WD	ICC/e4WD is not diagnosed.	UNKWN

Display Results (Present)

- OK: Normal
- NG: Malfunction
- UNKWN: The diagnosed unit does not transmit or receive the applicable data normally.

DESCRIPTION OF “CAN DIAG SUPPORT MNTR” SCREEN FOR ABS ACTUATOR AND ELECTRIC UNIT (CONTROL UNIT)

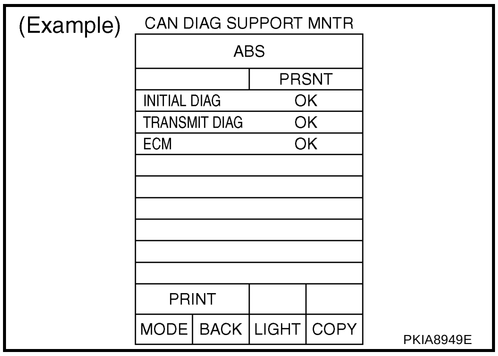

“SELECT SYSTEM” screen	“CAN DIAG SUPPORT MNTR” screen	Description	Present
ABS	INITIAL DIAG	Make sure that microcomputer in ECU works normally.	OK/NG
	TRANSMIT DIAG	Make sure of normal transmission.	OK/UNKWN
	ECM	Make sure of normal reception from ECM.	OK/UNKWN

Display Results (Present)

- OK: Normal
- NG: Malfunction
- UNKWN: The diagnosed unit does not transmit or receive the applicable data normally.

DESCRIPTION OF "CAN DIAG SUPPORT MNTR" SCREEN FOR VDC/TCS/ABS CONTROL UNIT

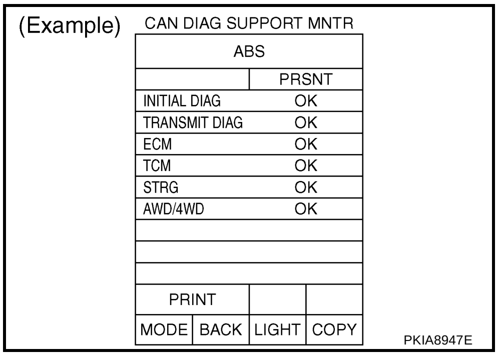

"SELECT SYSTEM" screen	"CAN DIAG SUPPORT MNTR" screen	Description	Present
ABS	INITIAL DIAG	Make sure that microcomputer in ECU works normally.	OK/UNKWN
	TRANSMIT DIAG	Make sure of normal transmission.	OK/UNKWN
	ECM	Make sure of normal reception from ECM.	OK/UNKWN
	TCM	Make sure of normal reception from TCM. (Not available for CAN system diagnosis.)	OK/UNKWN
	STRG	Make sure of normal reception from Steering angle sensor.	OK/UNKWN
	AWD/4WD	Make sure of normal reception from AWD control unit.	OK/UNKWN

Display Results (Present)

- OK: Normal
- NG: Malfunction
- UNKWN: The diagnosed unit does not transmit or receive the applicable data normally.

DESCRIPTION OF "CAN DIAG SUPPORT MNTR" SCREEN FOR AWD CONTROL UNIT

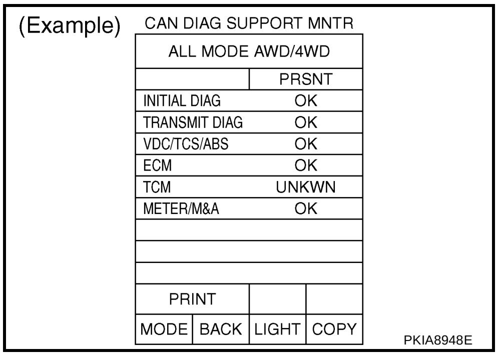

"SELECT SYSTEM" screen	"CAN DIAG SUPPORT MNTR" screen	Description	Present
ALL MODE AWD/4WD	INITIAL DIAG	Make sure that microcomputer in ECU works normally.	OK/NG
	TRANSMIT DIAG	Make sure of normal transmission.	OK/UNKWN
	VDC/TCS/ABS	Make sure of normal reception from ABS actuator and electric unit (control unit).	OK/UNKWN
		Make sure of normal reception from VDC/TCS/ABS control unit.	OK/UNKWN
	ECM	Make sure of normal reception from ECM.	OK/UNKWN
	TCM	TCM is not diagnosed.	UNKWN
	METER/M&A	Make sure of normal reception from combination meter. (Not available for CAN system diagnosis.)	OK/UNKWN

Display Results (Present)

- OK: Normal
- NG: Malfunction
- UNKWN: The diagnosed unit does not transmit or receive the applicable data normally.

CAN COMMUNICATION

PFP:23710

System Description

AKS00BCK

CAN (Controller Area Network) is a serial communication line for real time application. It is an on-vehicle multiplex communication line with high data communication speed and excellent error detection ability. Many electronic control units are equipped onto a vehicle, and each control unit shares information and links with other control units during operation (not independent). In CAN communication, control units are connected with 2 communication lines (CAN H line, CAN L line) allowing a high rate of information transmission with less wiring. Each control unit transmits/receives data but selectively reads required data only.

CAN Communication Unit

AKS00BCL

Go to CAN system, when selecting your CAN system type from the following table.

Body type	Wagon				
Axle	2WD	AWD			
Engine	QR25DE				
Transmission	A/T	M/T	A/T	M/T	A/T
Brake control	ABS			VDC	
CAN system type	1	2	3	4	5
CAN system trouble diagnosis	LAN-22	LAN-39	LAN-55	LAN-76	LAN-93

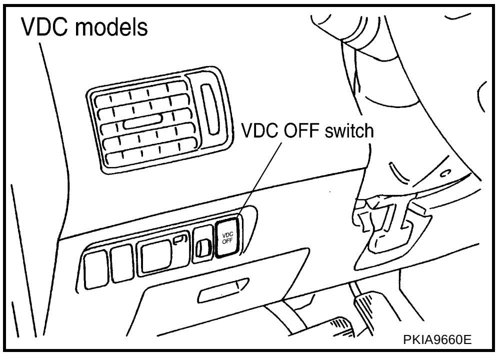

PKIA9660E

TYPE 1

System Diagram

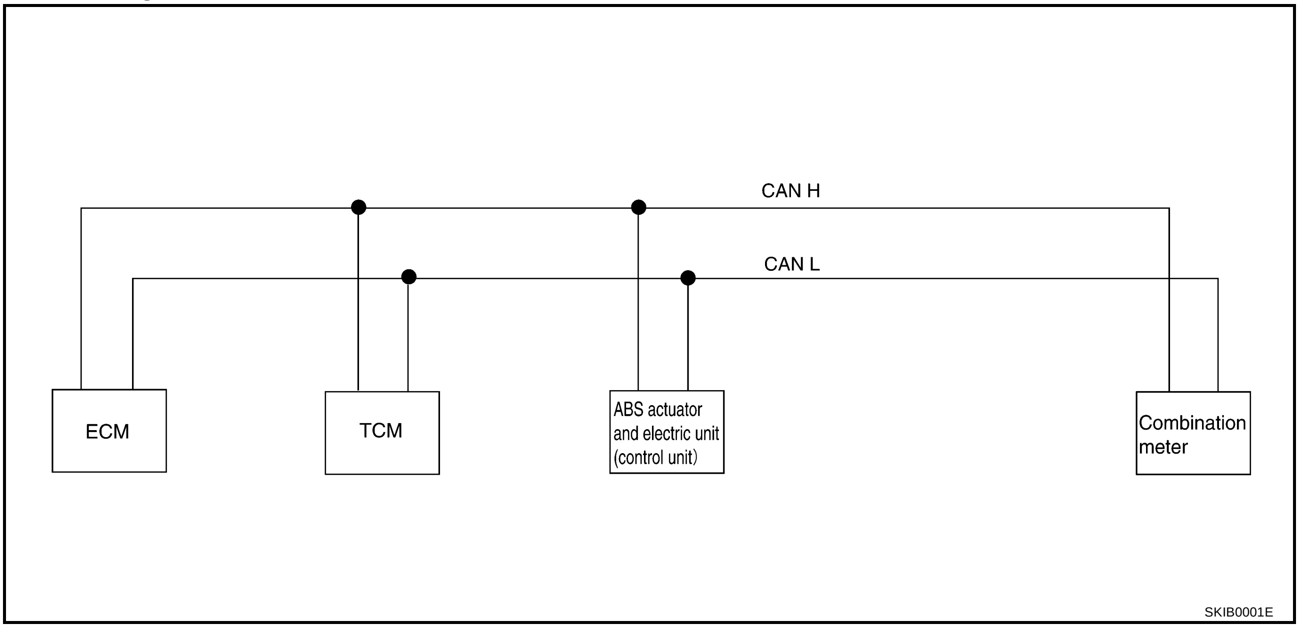

SKIB0001E

Input/Output Signal Chart

T: Transmit R: Receive

Signals	ECM	TCM	ABS actuator and electric unit (control unit)	Combination meter
Stop lamp switch signal		R		T
A/T self-diagnosis signal	R	T		
A/T position indicator lamp signal		T		R
Overdrive control switch signal		R		T
O/D OFF indicator signal		T		R
Closed throttle position signal	T	R		
Wide open throttle position signal	T	R		
Engine speed signal	T			R
Engine coolant temperature signal	T			R
Output shaft revolution signal	R	T		
A/C compressor feedback signal	T			R
Vehicle speed signal			T	R
	R			T
ABS warning lamp signal			T	R
Fuel level sensor signal	R			T
Malfunction indicator lamp signal	T			R
ASCD SET lamp signal	T			R
ASCD CRUISE lamp signal	T			R
Engine A/T integrated control signal	T	R		
	R	T		
Snow mode switch signal	R			T

TYPE 2

System Diagram

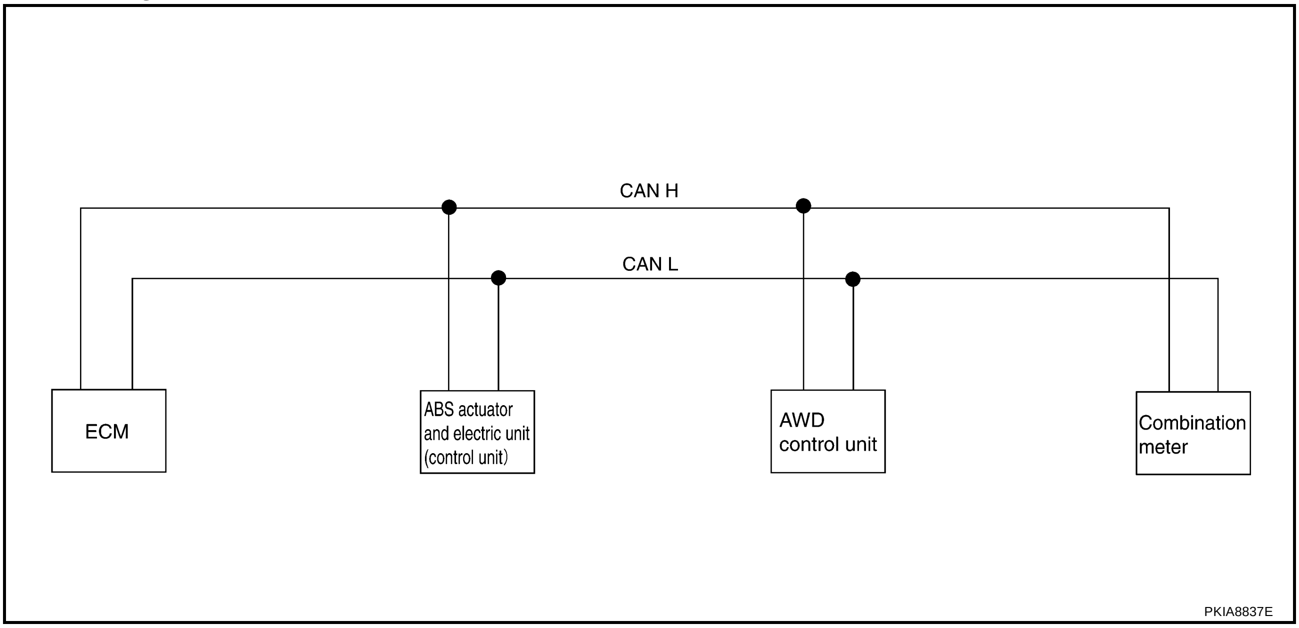

Input/Output Signal Chart

T: Transmit R: Receive

Signals	ECM	ABS actuator and electric unit (control unit)	AWD control unit	Combination meter
Stop lamp switch signal		T	R	
Engine speed signal	T		R	R
Engine coolant temperature signal	T			R
Accelerator pedal position signal	T		R	
A/C compressor feedback signal	T			R
Vehicle speed signal		T	R	R
	R			T
ABS warning lamp signal		T		R
AWD warning lamp signal			T	R
AWD mode indicator lamp signal			T	R
Parking brake switch signal			R	T
Fuel level sensor signal	R			T
Malfunction indicator lamp signal	T			R
ASCD SET lamp signal	T			R
ASCD CRUISE lamp signal	T			R

TYPE 3

System Diagram

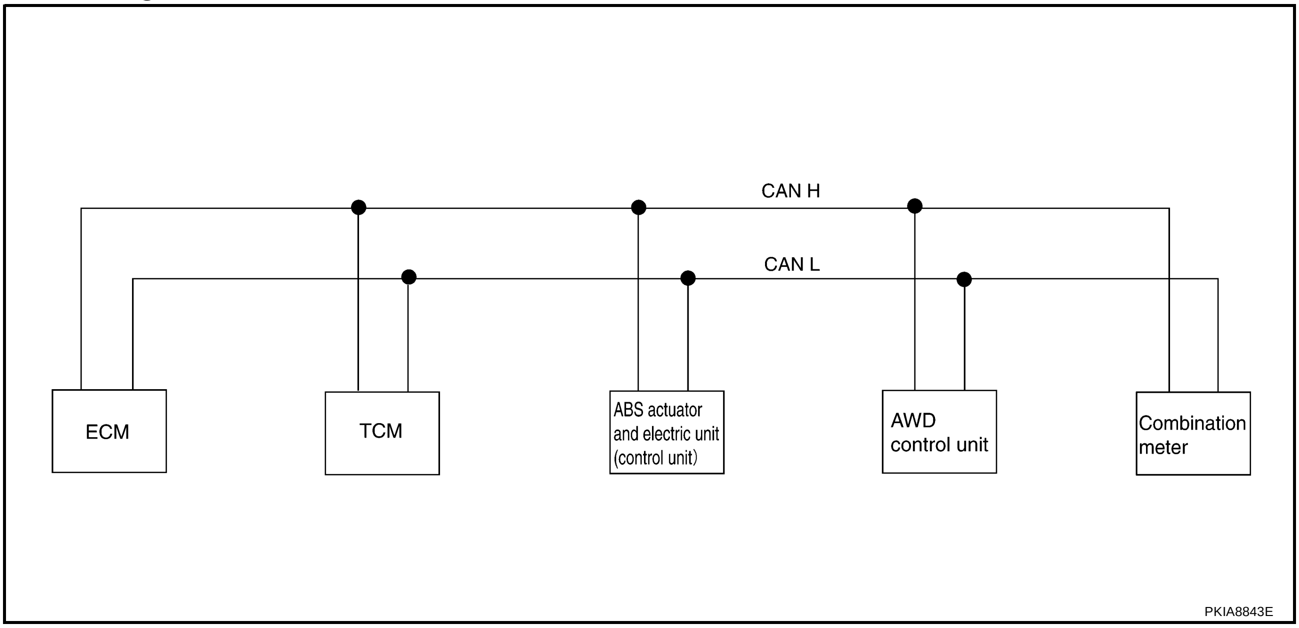

Input/Output Signal Chart

T: Transmit R: Receive

Signals	ECM	TCM	ABS actuator and electric unit (control unit)	AWD control unit	Combination meter
Stop lamp switch signal		R			T
			T	R	
A/T self-diagnosis signal	R	T			
A/T position indicator lamp signal		T			R
Overdrive control switch signal		R			T

Signals	ECM	TCM	ABS actuator and electric unit (control unit)	AWD control unit	Combination meter
O/D OFF indicator signal		T			R
Closed throttle position signal	T	R			
Wide open throttle position signal	T	R			
Engine speed signal	T			R	R
Engine coolant temperature signal	T				R
Output shaft revolution signal	R	T			
A/C compressor feedback signal	T				R
Vehicle speed signal			T	R	R
	R				T
ABS warning lamp signal			T		R
AWD warning lamp signal				T	R
AWD mode indicator lamp signal				T	R
Parking brake switch signal				R	T
Fuel level sensor signal	R				T
Malfunction indicator lamp signal	T				R
ASCD SET lamp signal	T				R
ASCD CRUISE lamp signal	T				R
Engine A/T integrated control signal	T	R			
	R	T			

TYPE 4

System Diagram

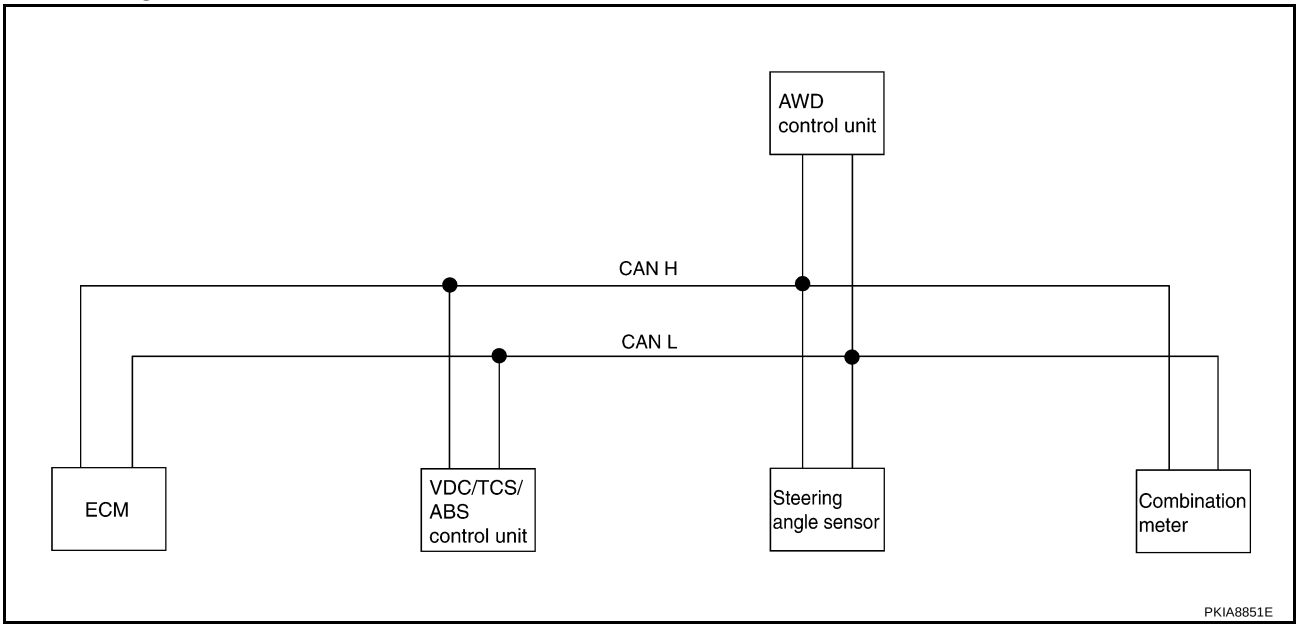

Input/Output Signal Chart

T: Transmit R: Receive

Signals	ECM	VDC/TCS/ABS control unit	Steering angle sensor	AWD control unit	Combination meter
Stop lamp switch signal		T		R	
Engine speed signal	T	R		R	R
Engine coolant temperature signal	T				R

Signals	ECM	VDC/TCS/ABS control unit	Steering angle sensor	AWD control unit	Combination meter
Accelerator pedal position signal	T	R		R	
A/C compressor feedback signal	T				R
Vehicle speed signal		T		R	R
	R				T
ABS warning lamp signal		T			R
Brake warning lamp signal		T			R
SLIP indicator lamp signal		T			R
VDC OFF indicator lamp signal		T			R
AWD warning lamp signal				T	R
AWD mode indicator lamp signal				T	R
Parking brake switch signal				R	T
Fuel level sensor signal	R				T
Malfunction indicator lamp signal	T				R
ASCD SET lamp signal	T				R
ASCD CRUISE lamp signal	T				R
Steering angle sensor signal		R	T		

TYPE 5

System Diagram

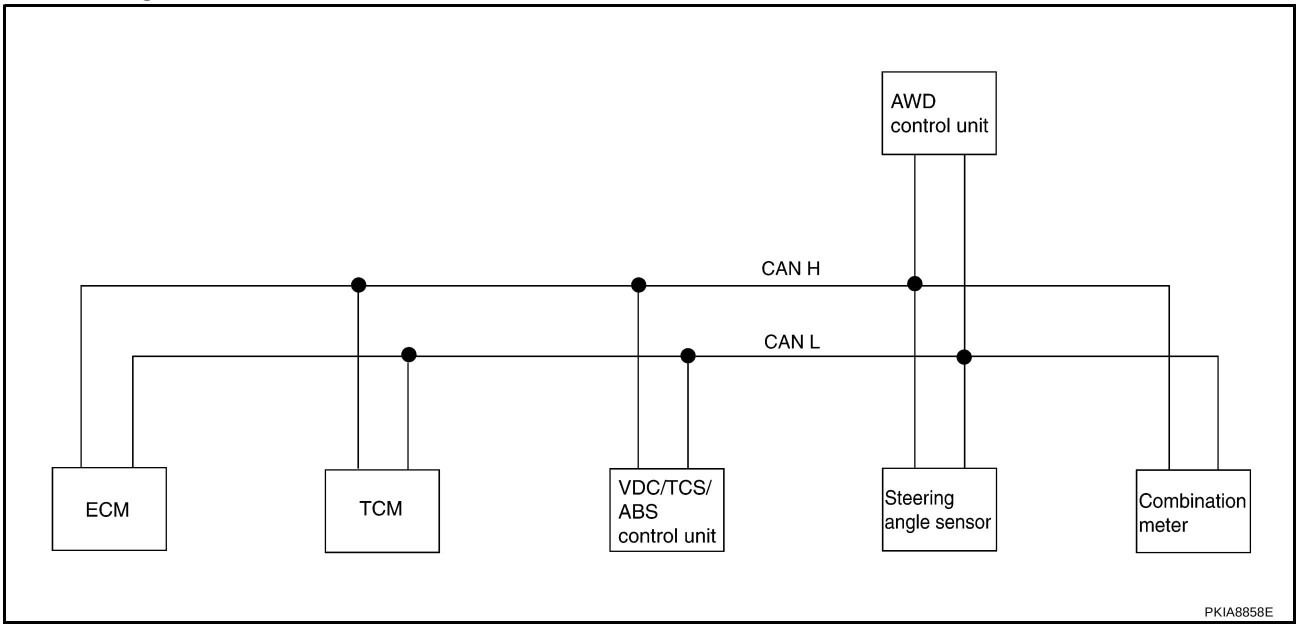

Input/Output Signal Chart

T: Transmit R: Receive

Signals	ECM	TCM	VDC/TCS/ ABS control unit	Steering angle sensor	AWD control unit	Combination meter
Stop lamp switch signal		R				T
			T		R	
A/T position indicator lamp signal		T	R			R
O/D OFF indicator signal		T				R
Overdrive control switch signal		R				T
Closed throttle position signal	T	R				

Signals	ECM	TCM	VDC/TCS/ ABS control unit	Steering angle sensor	AWD control unit	Combination meter
Wide open throttle position signal	T	R				
Engine speed signal	T		R		R	R
Engine coolant temperature signal	T					R
Accelerator pedal position signal	T		R		R	
Output shaft revolution signal	R	T				
A/C compressor feedback signal	T					R
Vehicle speed signal			T		R	R
	R					T
ABS warning lamp signal			T			R
Brake warning lamp signal			T			R
SLIP indicator lamp signal			T			R
VDC OFF indicator lamp signal			T			R
AWD warning lamp signal					T	R
AWD mode indicator lamp signal					T	R
Parking brake switch signal					R	T
Fuel level sensor signal	R					T
Malfunction indicator lamp signal	T					R
ASCD SET lamp signal	T					R
ASCD CRUISE lamp signal	T					R
Steering angle sensor signal			R	T		
Engine and A/T integrated control signal	T	R				
	R	T				
A/T self-diagnosis signal	R	T				

CAN SYSTEM (TYPE 1)

PFP:23710

Component Parts and Harness Connector Location

AKS00BK2

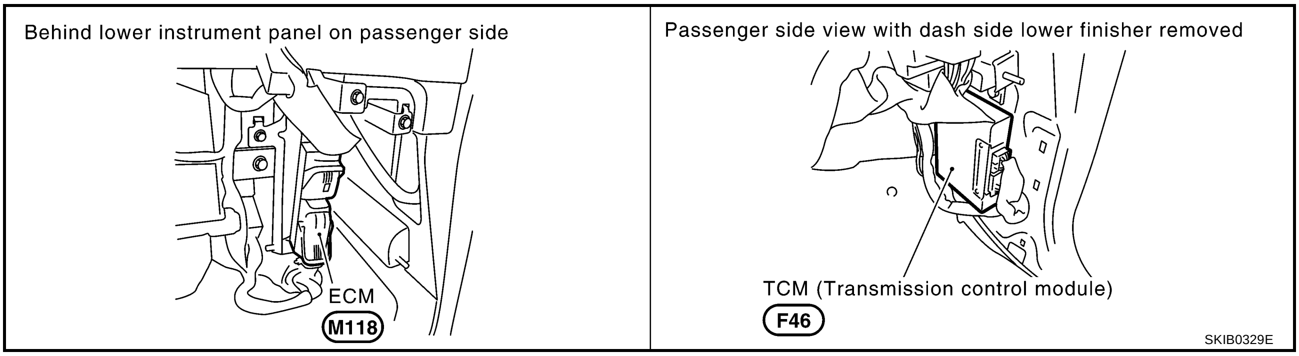

Wiring Diagram — CAN —

AKS00BK3

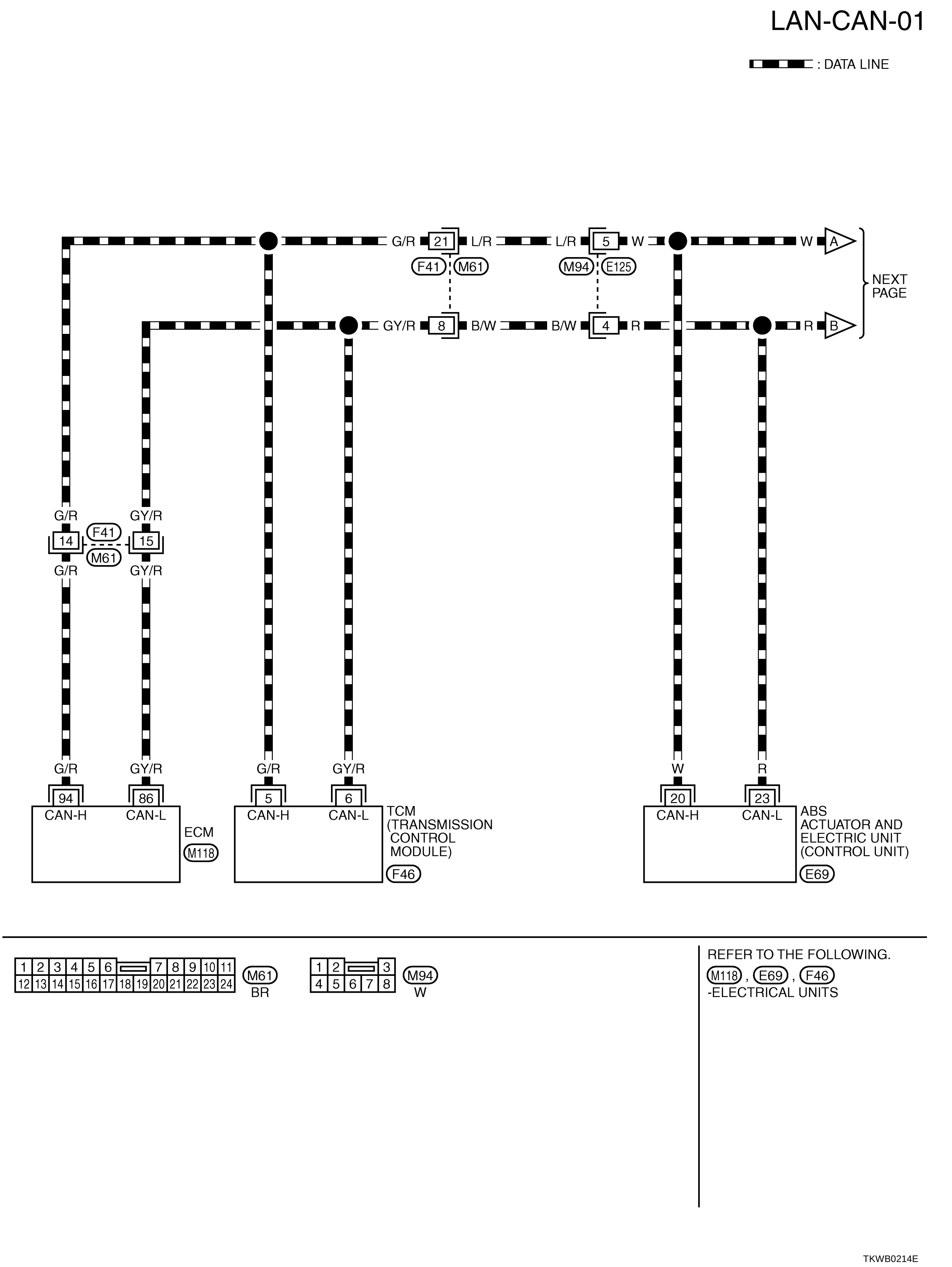

LAN-CAN-02

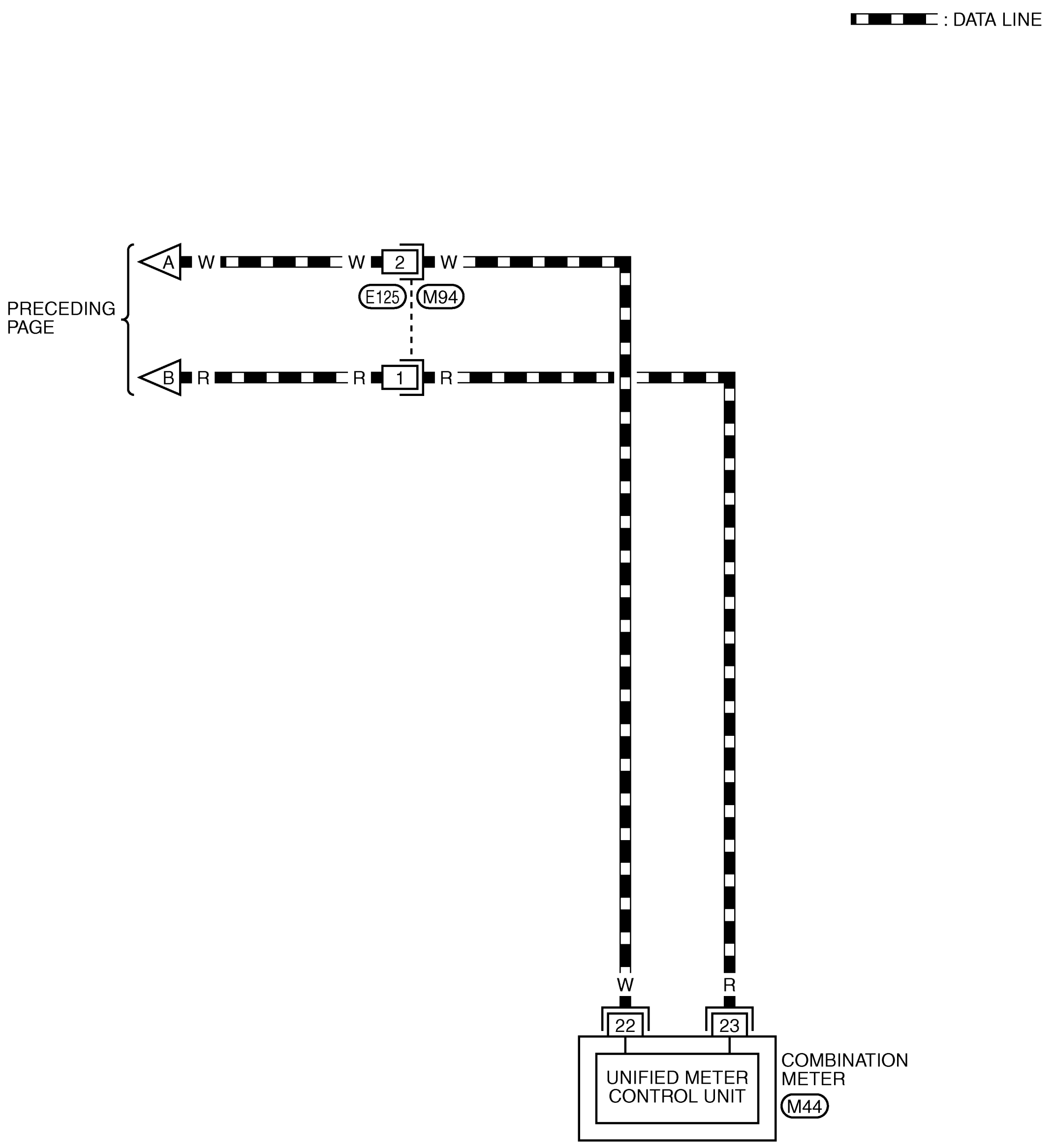

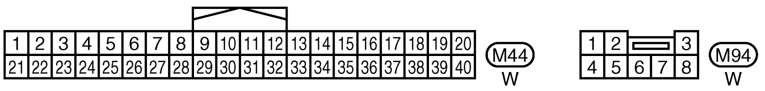

TKWB0215E

Check Sheet

AKS00BK4

NOTE:

If a check mark is put on “NG” on “INITIAL DIAG (Initial diagnosis)”, replace the control unit.

Check sheet table

SELECT SYSTEM screen	CAN DIAG SUPPORT MNTR					SELF-DIAG RESULTS	
	Initial diagnosis	Transmit diagnosis	Receive diagnosis				
			ECM	TCM	METER /M&A		
ENGINE	NG	UNKWN	–	UNKWN	UNKWN	CAN COMM CIRCUIT (U1000)	CAN COMM CIRCUIT (U1001)
A/T	NG	UNKWN	UNKWN	–	UNKWN	CAN COMM CIRCUIT (U1000)	–
ABS	NG	UNKWN	UNKWN	–	–	CAN COMM CIRCUIT (U1000)	–

Symptoms :

Attach copy of ENGINE SELF-DIAG RESULTS

Attach copy of A/T SELF-DIAG RESULTS

Attach copy of ABS SELF-DIAG RESULTS

Attach copy of ENGINE CAN DIAG SUPPORT MNTR

Attach copy of A/T CAN DIAG SUPPORT MNTR

Attach copy of ABS CAN DIAG SUPPORT MNTR

PKIA8754E

A B C D E F G H I J LAN L M

CHECK SHEET RESULTS (EXAMPLE)

NOTE:

If a check mark is put on “NG” on “INITIAL DIAG (Initial diagnosis)”, replace the control unit.

Case 1

Check harness between TCM and ABS actuator and electric unit (control unit). Refer to LAN-31, "Between TCM and ABS Actuator and Electric Unit (Control Unit) Circuit Inspection" .

SELECT SYSTEM screen	CAN DIAG SUPPORT MNTR					SELF-DIAG RESULTS	
	Initial diagnosis	Transmit diagnosis	Receive diagnosis				
			ECM	TCM	METER /M&A		
ENGINE	NG	UNKWN	–	UNKWN	UNKWN ✓	CAN COMM CIRCUIT (U1000)	CAN COMM CIRCUIT (U1001) ✓
A/T	NG	UNKWN	UNKWN	–	–	–	–
ABS	NG	UNKWN	UNKWN ✓	–	–	CAN COMM CIRCUIT (U1000) ✓	–

PKIA8755E

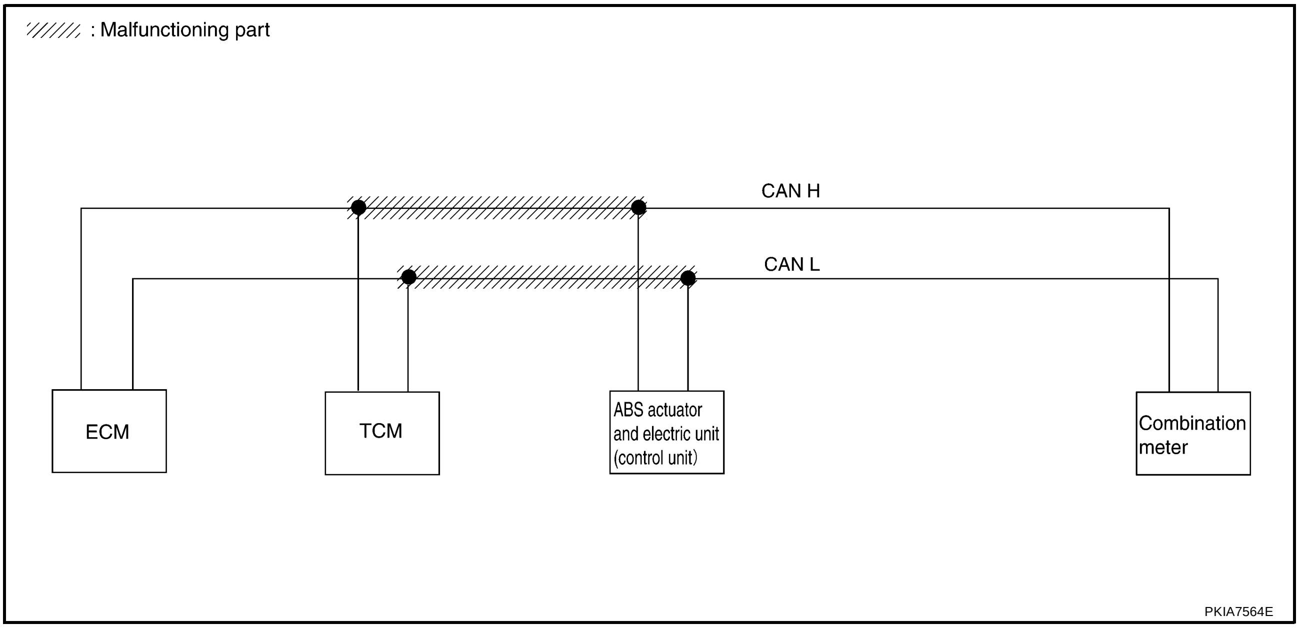

Case 2

Check ECM circuit. Refer to LAN-32, "ECM Circuit Inspection" .

SELECT SYSTEM screen	CAN DIAG SUPPORT MNTR					SELF-DIAG RESULTS	
	Initial diagnosis	Transmit diagnosis	Receive diagnosis				
			ECM	TCM	METER /M&A		
ENGINE	NG	UNKWN ✓	–	UNKWN ✓	UNKWN ✓	CAN COMM CIRCUIT (U1000) ✓	CAN COMM CIRCUIT (U1001) ✓
A/T	NG	UNKWN	–	–	UNKWN	–	–
ABS	NG	UNKWN	UNKWN ✓	–	–	CAN COMM CIRCUIT (U1000) ✓	–

PKIA8756E

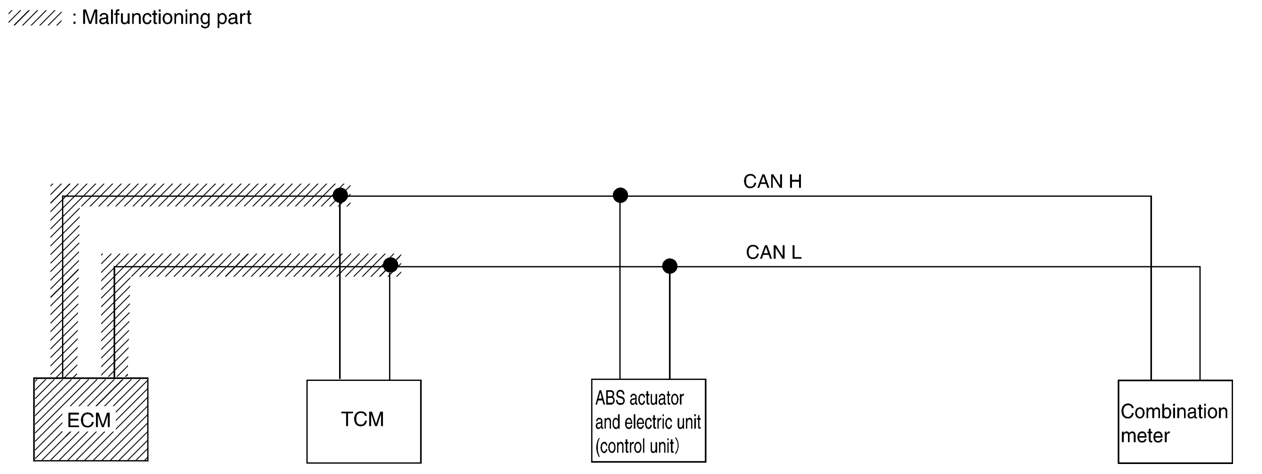

PKIA7565E

Case 3

Check TCM circuit. Refer to LAN-33, "TCM Circuit Inspection" .

SELECT SYSTEM screen	CAN DIAG SUPPORT MNTR					SELF-DIAG RESULTS	
	Initial diagnosis	Transmit diagnosis	Receive diagnosis				
			ECM	TCM	METER /M&A		
ENGINE	NG	UNKWN	–	UNKWN	UNKWN	CAN COMM CIRCUIT (U1000)	CAN COMM CIRCUIT (U1001)
A/T	NG	–	–	–	–	–	–
ABS	NG	UNKWN	UNKWN	–	–	CAN COMM CIRCUIT (U1000)	–

PKIA8757E

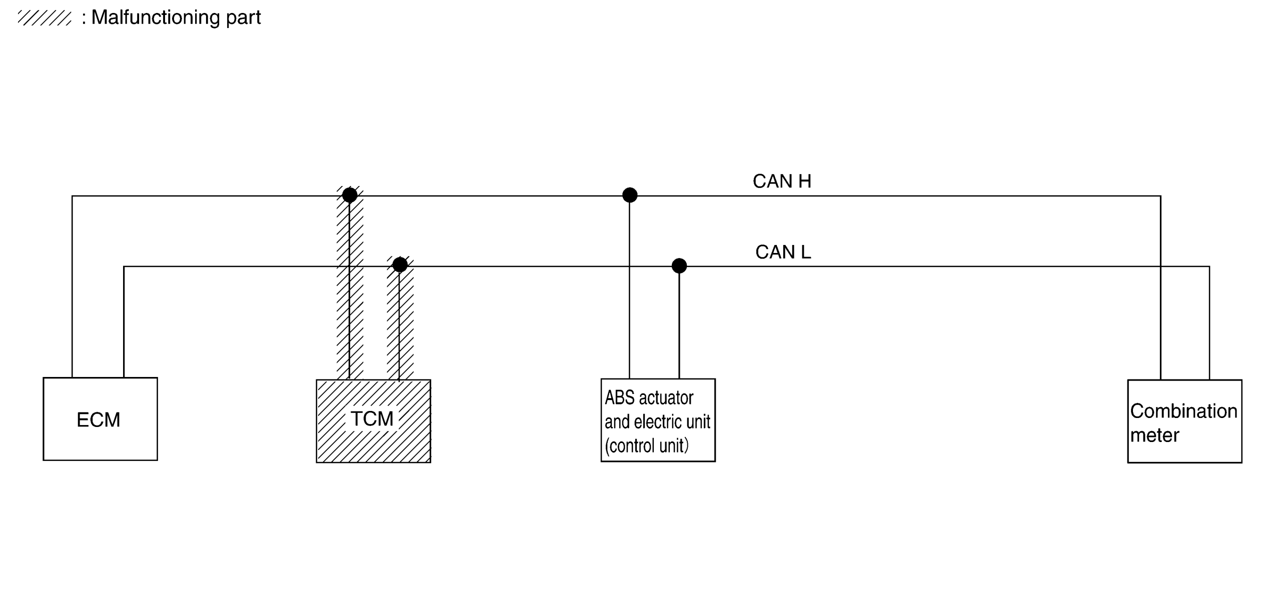

PKIA7566E

Case 4

Check ABS actuator and electric unit (control unit) circuit. Refer to LAN-33, "ABS Actuator and Electric Unit (Control Unit) Circuit Inspection" .

SELECT SYSTEM screen	CAN DIAG SUPPORT MNTR					SELF-DIAG RESULTS	
	Initial diagnosis	Transmit diagnosis	Receive diagnosis				
			ECM	TCM	METER /M&A		
ENGINE	NG	UNKWN	—	UNKWN	UNKWN	CAN COMM CIRCUIT (U1000)	CAN COMM CIRCUIT (U1001)
A/T	NG	UNKWN	UNKWN	—	UNKWN	CAN COMM CIRCUIT (U1000)	—
ABS	NG	UNKWN	UNKWN	—	—	CAN COMM CIRCUIT (U1000)	—

PKIA8758E

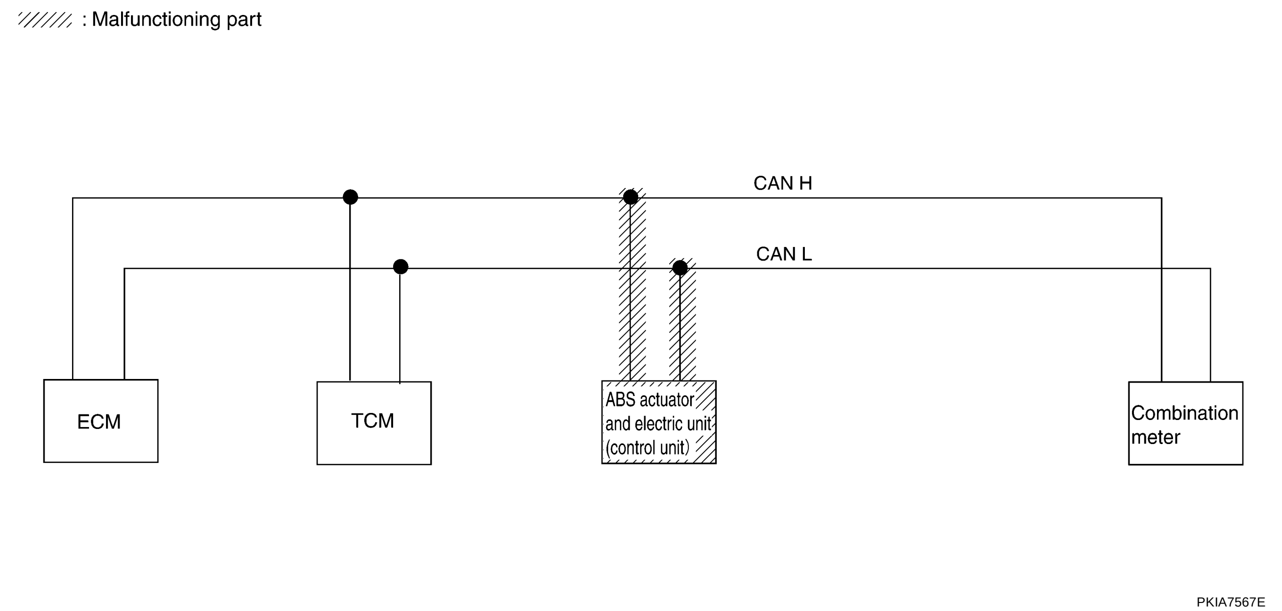

Case 5

Check combination meter circuit. Refer to LAN-34, "Combination Meter Circuit Inspection" .

SELECT SYSTEM screen	CAN DIAG SUPPORT MNTR					SELF-DIAG RESULTS	
	Initial diagnosis	Transmit diagnosis	Receive diagnosis				
			ECM	TCM	METER /M&A		
ENGINE	NG	UNKWN	–	UNKWN	UNKWN ✓	CAN COMM CIRCUIT (U1000)	CAN COMM CIRCUIT (U1001) ✓
A/T	NG	UNKWN	UNKWN	–	–	–	–
ABS	NG	UNKWN	UNKWN	–	–	CAN COMM CIRCUIT (U1000)	–

PKIA8759E

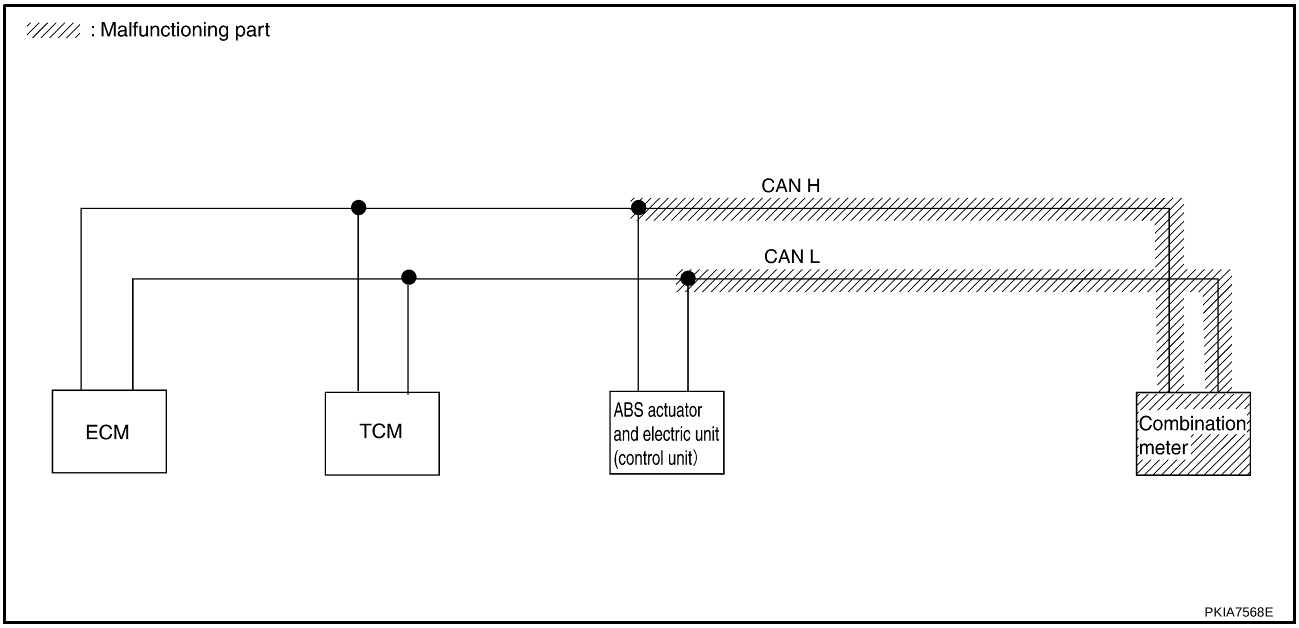

Case 6

Check CAN communication circuit. Refer to LAN-35, "CAN Communication Circuit Inspection" .

SELECT SYSTEM screen	CAN DIAG SUPPORT MNTR					SELF-DIAG RESULTS	
	Initial diagnosis	Transmit diagnosis	Receive diagnosis				
			ECM	TCM	METER /M&A		
ENGINE	NG	UNKWN	–	UNKWN	UNKWN	CAN COMM CIRCUIT (U1000)	CAN COMM CIRCUIT (U1001)
A/T	NG	–	–	–	–	–	–
ABS	NG	UNKWN	UNKWN	–	–	CAN COMM CIRCUIT (U1000)	–

PKIA8760E

Between TCM and ABS Actuator and Electric Unit (Control Unit) Circuit Inspection

AKS00BK5

1. CHECK CONNECTOR

1. Turn ignition switch OFF.
2. Disconnect battery cable at negative terminal.
3. Check following terminals and connectors for damage, bend and loose connection (connector side and harness side).

- Harness connector F41
- Harness connector M61
- Harness connector M94
- Harness connector E125

OK or NG

OK >> GO TO 2.
NG >> Repair terminal or connector.

2. CHECK HARNESS FOR OPEN CIRCUIT

1. Disconnect TCM connector and harness connector F41.
2. Check continuity between TCM harness connector F46 terminals 5 (G/R), 6 (GY/R) and harness connector F41 terminals 21 (G/R), 8 (GY/R).

5 (G/R) – 21 (G/R) : Continuity should exist.
6 (GY/R) – 8 (GY/R) : Continuity should exist.

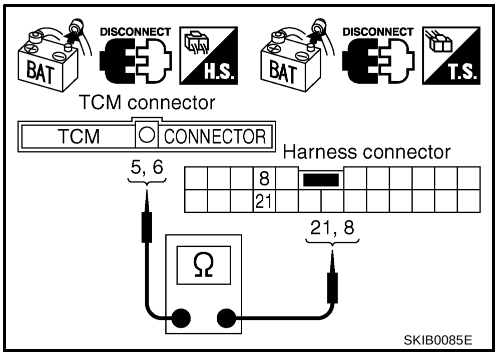

SKIB0085E

OK or NG

OK >> GO TO 3.
NG >> Repair harness.

3. CHECK HARNESS FOR OPEN CIRCUIT

1. Disconnect harness connector M94.
2. Check continuity between harness connector M61 terminals 21 (L/R), 8 (B/W) and harness connector M94 terminals 5 (L/R), 4 (B/W).

21 (L/R) – 5 (L/R) : Continuity should exist.
8 (B/W) – 4 (B/W) : Continuity should exist.

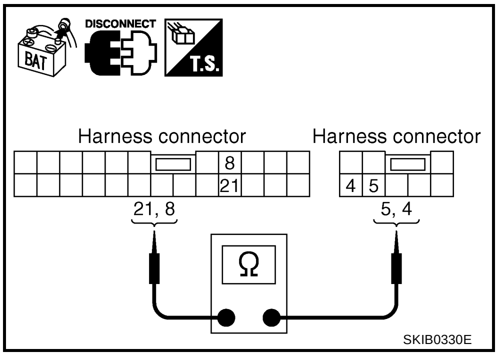

OK or NG

OK >> GO TO 4.
NG >> Repair harness.

4. CHECK HARNESS FOR OPEN CIRCUIT

1. Disconnect ABS actuator and electric unit (control unit) connector.
2. Check continuity between harness connector E125 terminals 5 (W), 4 (R) and ABS actuator and electric unit (control unit) harness connector E69 terminals 20 (W), 23 (R).

5 (W) – 20 (W) : Continuity should exist.
4 (R) – 23 (R) : Continuity should exist.

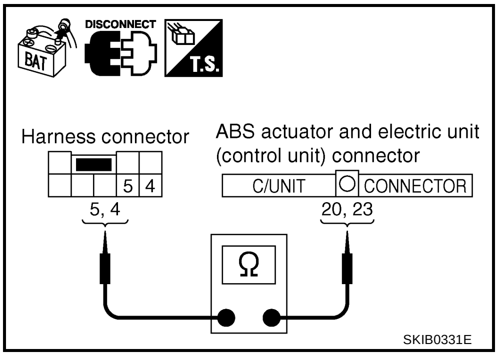

OK or NG

OK >> Connect all the connectors and diagnose again. Refer to LAN-4, "TROUBLE DIAGNOSES WORK FLOW" .
NG >> Repair harness.

ECM Circuit Inspection

AKS00BK6

1. CHECK CONNECTOR

1. Turn ignition switch OFF.
2. Disconnect battery cable at negative terminal.
3. Check following terminals and connectors for damage, bend and loose connection (control module side and harness side).

– ECM connector
– Harness connector M61
– Harness connector F41

OK or NG

OK >> GO TO 2.
NG >> Repair terminal or connector.

2. CHECK HARNESS FOR OPEN CIRCUIT

1. Disconnect ECM connector.
2. Check resistance between ECM harness connector M118 terminals 94 (G/R) and 86 (GY/R).

94 (G/R) – 86 (GY/R) : Approx. 108 – 132Ω

OK or NG

OK >> Replace ECM.
NG >> Repair harness between ECM and TCM.

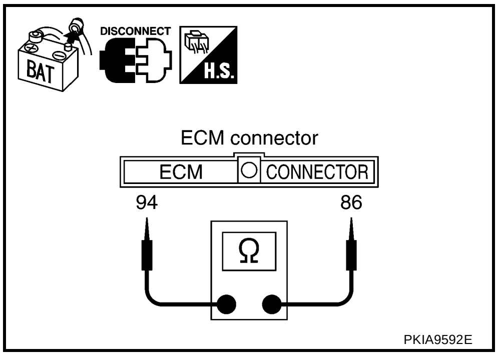

TCM Circuit Inspection

AKS00BK7

1. CHECK CONNECTOR

1. Turn ignition switch OFF.
2. Disconnect battery cable at negative terminal.
3. Check terminals and connector of TCM for damage, bend and loose connection (control module side and harness side).

OK or NG

OK >> GO TO 2.
NG >> Repair terminal or connector.

2. CHECK HARNESS FOR OPEN CIRCUIT

1. Disconnect TCM connector.
2. Check resistance between TCM harness connector F46 terminals 5 (G/R) and 6 (GY/R).

5 (G/R) – 6 (GY/R) : Approx. 54 – 66Ω

OK or NG

OK >> Replace TCM.
NG >> Repair harness between TCM and harness connector F41.

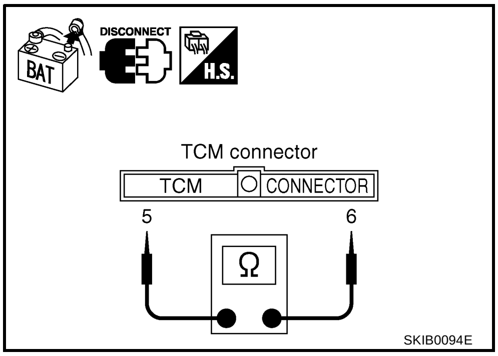

ABS Actuator and Electric Unit (Control Unit) Circuit Inspection

AKS00BK8

1. CHECK CONNECTOR

1. Turn ignition switch OFF.
2. Disconnect battery cable at negative terminal.
3. Check terminals and connector of ABS actuator and electric unit (control unit) for damage, bend and loose connection (control unit side and harness side).

OK or NG

OK >> GO TO 2.
NG >> Repair terminal or connector.

2. CHECK HARNESS FOR OPEN CIRCUIT

1. Disconnect ABS actuator and electric unit (control unit) connector.
2. Check resistance between ABS actuator and electric unit (control unit) harness connector E69 terminals 20 (W) and 23 (R).

20 (W) – 23 (R) : Approx. 54 – 66Ω

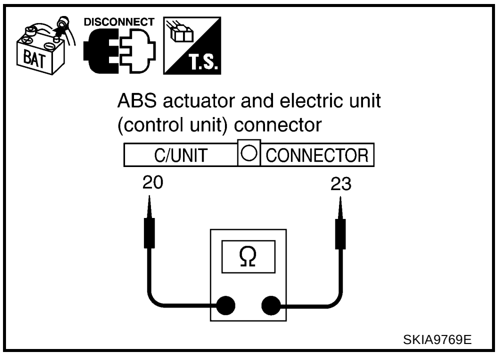

OK or NG

OK >> Replace ABS actuator and electric unit (control unit).
NG >> Repair harness between ABS actuator and electric unit (control unit) and harness connector E125.

Combination Meter Circuit Inspection

AKS00BK9

1. CHECK CONNECTOR

1. Turn ignition switch OFF.
2. Disconnect battery cable at negative terminal.
3. Check following terminals and connectors for damage, bend and loose connection (meter side and harness side).

- Combination meter connector
- Harness connector M94
- Harness connector E125

OK or NG

OK >> GO TO 2.
NG >> Repair terminal or connector.

2. CHECK HARNESS FOR OPEN CIRCUIT

1. Disconnect combination meter connector.
2. Check resistance between combination meter harness connector M44 terminals 22 (W) and 23 (R).

22 (W) – 23 (R) : Approx. 108 – 132Ω

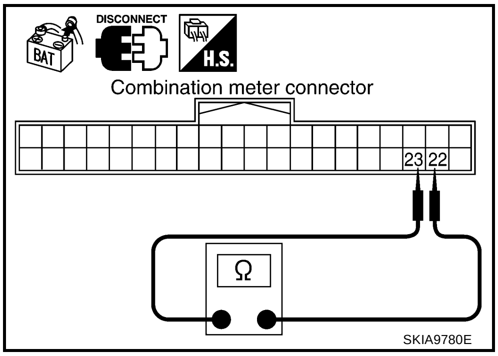

OK or NG

OK >> Replace combination meter.
NG >> Repair harness between combination meter and ABS actuator and electric unit (control unit).

CAN Communication Circuit Inspection

AKS00BKA

1. CHECK CONNECTOR

1. Turn ignition switch OFF.
2. Disconnect battery cable at negative terminal.
3. Check following terminals and connectors for damage, bend and loose connection (control module side, control unit side, meter side, connector side and harness side).

- ECM
- TCM
- ABS actuator and electric unit (control unit)
- Combination meter
- Between ECM and combination meter

OK or NG

OK >> GO TO 2.
NG >> Repair terminal or connector.

2. CHECK HARNESS FOR SHORT CIRCUIT

1. Disconnect ECM connector and harness connector M61.
2. Check continuity between ECM harness connector M118 terminals 94 (G/R) and 86 (GY/R).

94 (G/R) – 86 (GY/R) : Continuity should not exist.

OK or NG

OK >> GO TO 3.
NG >> Repair harness between ECM and harness connector M61.

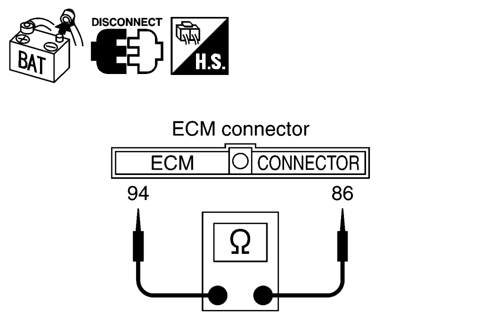

PKIA9592E

3. CHECK HARNESS FOR SHORT CIRCUIT

Check continuity between ECM harness connector M118 terminals 94 (G/R), 86 (GY/R) and ground.

94 (G/R) – Ground : Continuity should not exist.
86 (GY/R) – Ground : Continuity should not exist.

OK or NG

OK >> GO TO 4.
NG >> Repair harness between ECM and harness connector M61.

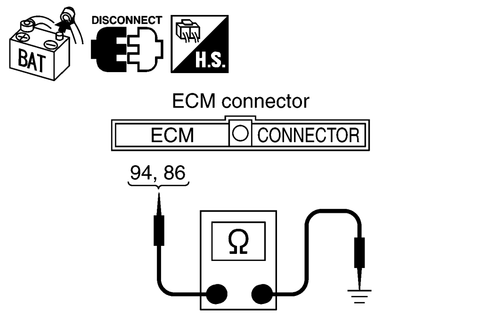

PKIA9593E

4. CHECK HARNESS FOR SHORT CIRCUIT

1. Disconnect TCM connector.
2. Check continuity between TCM harness connector F46 terminals 5 (G/R) and 6 (GY/R).

5 (G/R) – 6 (GY/R) : Continuity should not exist.

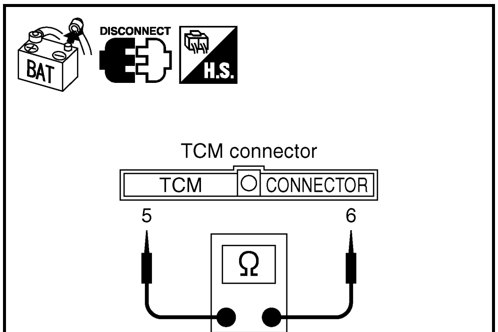

SKIB0094E

OK or NG

OK >> GO TO 5.
NG >> Repair harness between TCM and harness connector F41.

5. CHECK HARNESS FOR SHORT CIRCUIT

Check continuity between TCM harness connector F46 terminals 5 (G/R), 6 (GY/R) and ground.

5 (G/R) – Ground : Continuity should not exist.
6 (GY/R) – Ground : Continuity should not exist.

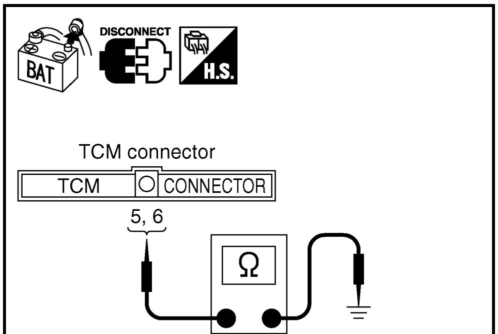

SKIB0099E

OK or NG

OK >> GO TO 6.
NG >> Repair harness between TCM and harness connector F41.

6. CHECK HARNESS FOR SHORT CIRCUIT

1. Disconnect harness connector M94.
2. Check continuity between harness connector M61 terminals 21 (L/R) and 8 (B/W).

21 (L/R) – 8 (B/W) : Continuity should not exist.

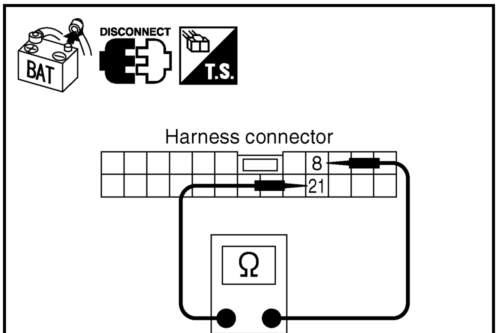

SKIB0096E

OK or NG

OK >> GO TO 7.
NG >> Repair harness between harness connector M61 and harness connector M94.

7. CHECK HARNESS FOR SHORT CIRCUIT

Check continuity between harness connector M61 terminals 21 (L/R), 8 (B/W) and ground.

21 (L/R) – Ground : Continuity should not exist.
8 (B/W) – Ground : Continuity should not exist.

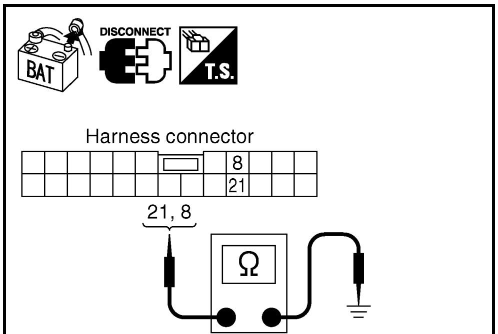

SKIB0100E

OK or NG

OK >> GO TO 8.
NG >> Repair harness between harness connector M61 and harness connector M94.

8. CHECK HARNESS FOR SHORT CIRCUIT

1. Disconnect ABS actuator and electric unit (control unit) connector.
2. Check continuity between ABS actuator and electric unit (control unit) harness connector E69 terminals 20 (W) and 23 (R).

20 (W) – 23 (R) : Continuity should not exist.

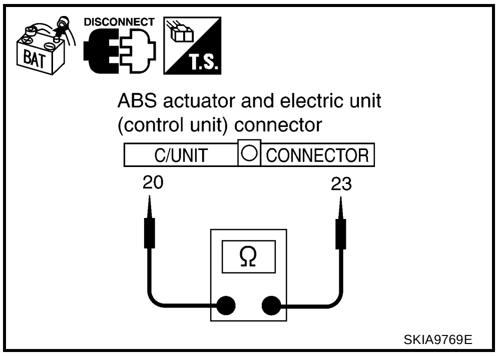

OK or NG

OK >> GO TO 9.
NG >> Repair harness between ABS actuator and electric unit (control unit) and harness connector E125.

9. CHECK HARNESS FOR SHORT CIRCUIT

Check continuity between ABS actuator and electric unit (control unit) harness connector E69 terminals 20 (W), 23 (R) and ground.

20 (W) – Ground : Continuity should not exist.
23 (R) – Ground : Continuity should not exist.

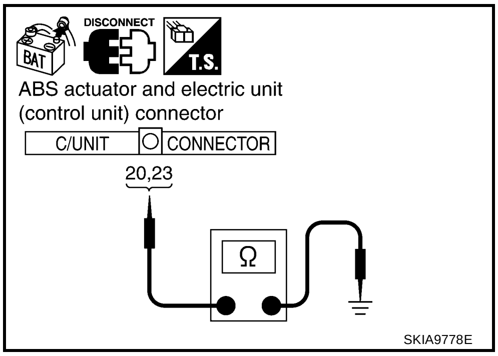

OK or NG

OK >> GO TO 10.
NG >> Repair harness between ABS actuator and electric unit (control unit) and harness connector E125.

10. CHECK HARNESS FOR SHORT CIRCUIT

1. Disconnect combination meter connector.
2. Check continuity between combination meter harness connector M44 terminals 22 (W) and 23 (R).

22 (W) – 23 (R) : Continuity should not exist.

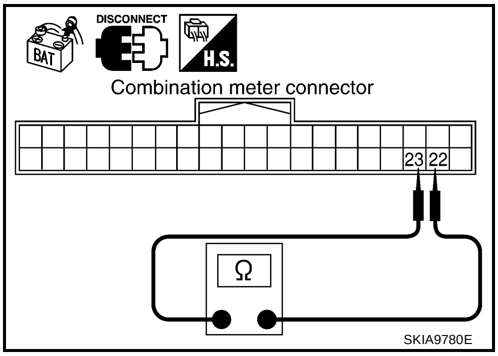

OK or NG

OK >> GO TO 11.
NG >> Repair harness between combination meter and harness connector M94.

11. CHECK HARNESS FOR SHORT CIRCUIT

Check continuity between combination meter harness connector M44 terminals 22 (W), 23 (R) and ground.

22 (W) – Ground : Continuity should not exist.
23 (R) – Ground : Continuity should not exist.

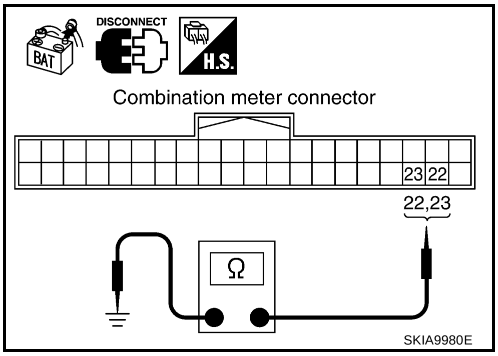

OK or NO

OK >> GO TO 12.
NG >> Repair harness between combination meter and harness connector M94.

12. CHECK ECM AND COMBINATION METER INTERNAL CIRCUIT

1. Remove ECM and combination meter from vehicle.
2. Check resistance between ECM terminals 94 and 86.
3. Check resistance between combination meter terminals 22 and 23.

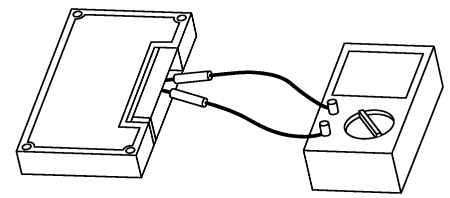

Unit	Terminal	Resistance (Ω) (Approx.)
ECM	94 – 86	108 – 132
Combination meter	22 – 23	

OK or NG

OK >> GO TO 13.
NG >> Replace ECM and/or combination meter.

13. CHECK SYMPTOM

1. Fill in described symptoms on the column “Symptom” in the check sheet.
2. Connect all connectors, and then make sure that the symptom is reproduced.

OK or NG

OK >> GO TO 14.
NG >> Refer to LAN-11, "Example of Filling in Check Sheet When Initial Conditions Are Not Reproduced".

14. CHECK UNIT REPRODUCIBILITY

Performs the following procedure for each unit, and then perform reproducibility test.

1. Turn ignition switch OFF.
2. Disconnect battery cable at negative terminal.
3. Disconnect the unit connector.
4. Connect battery cable at negative terminal.
5. Make sure that the symptom filled in the “Symptom” of the check sheet is reproduced. (Do not confuse it with the symptom related to removed unit.)
6. Make sure that the same symptom is reproduced.

- TCM
- ABS actuator and electric unit (control unit)
- ECM
- Combination meter

Check results

Reproduce>>Install removed unit, and then check the other units.
Not reproduced>>Replace removed unit.

CAN SYSTEM (TYPE 2)

PFP:23710

Component Parts and Harness Connector Location

AKS00BKD

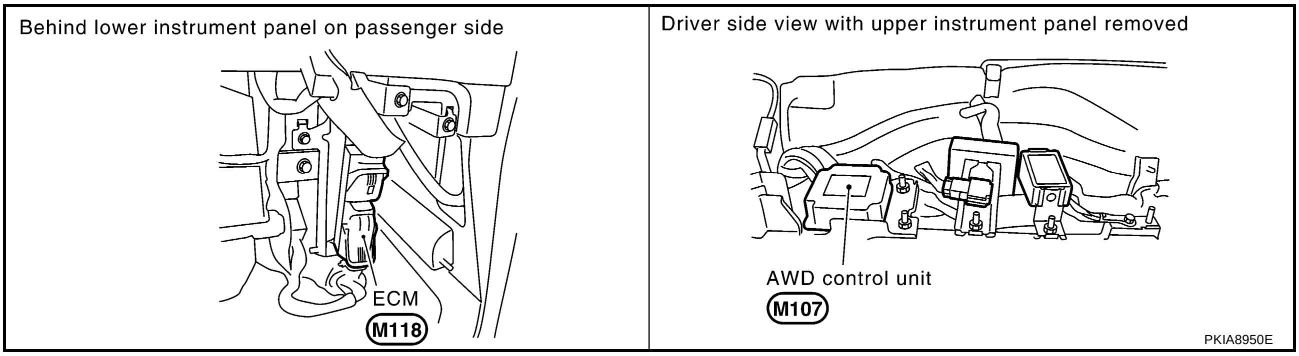

Wiring Diagram — CAN —

AKS00BKE

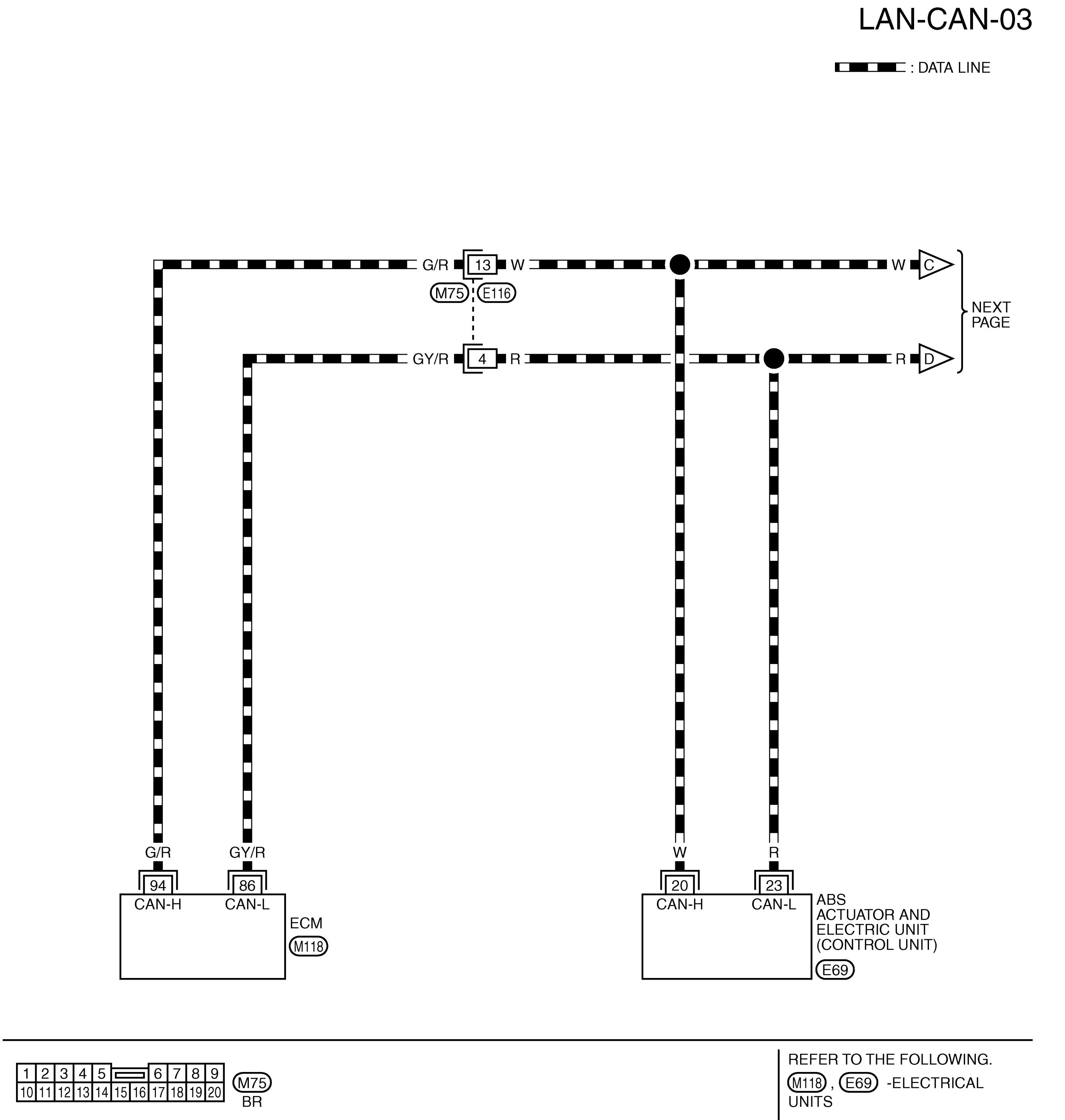

REFER TO THE FOLLOWING.
M118 , E69 -ELECTRICAL UNITS

TKWB0216E

LAN-CAN-04

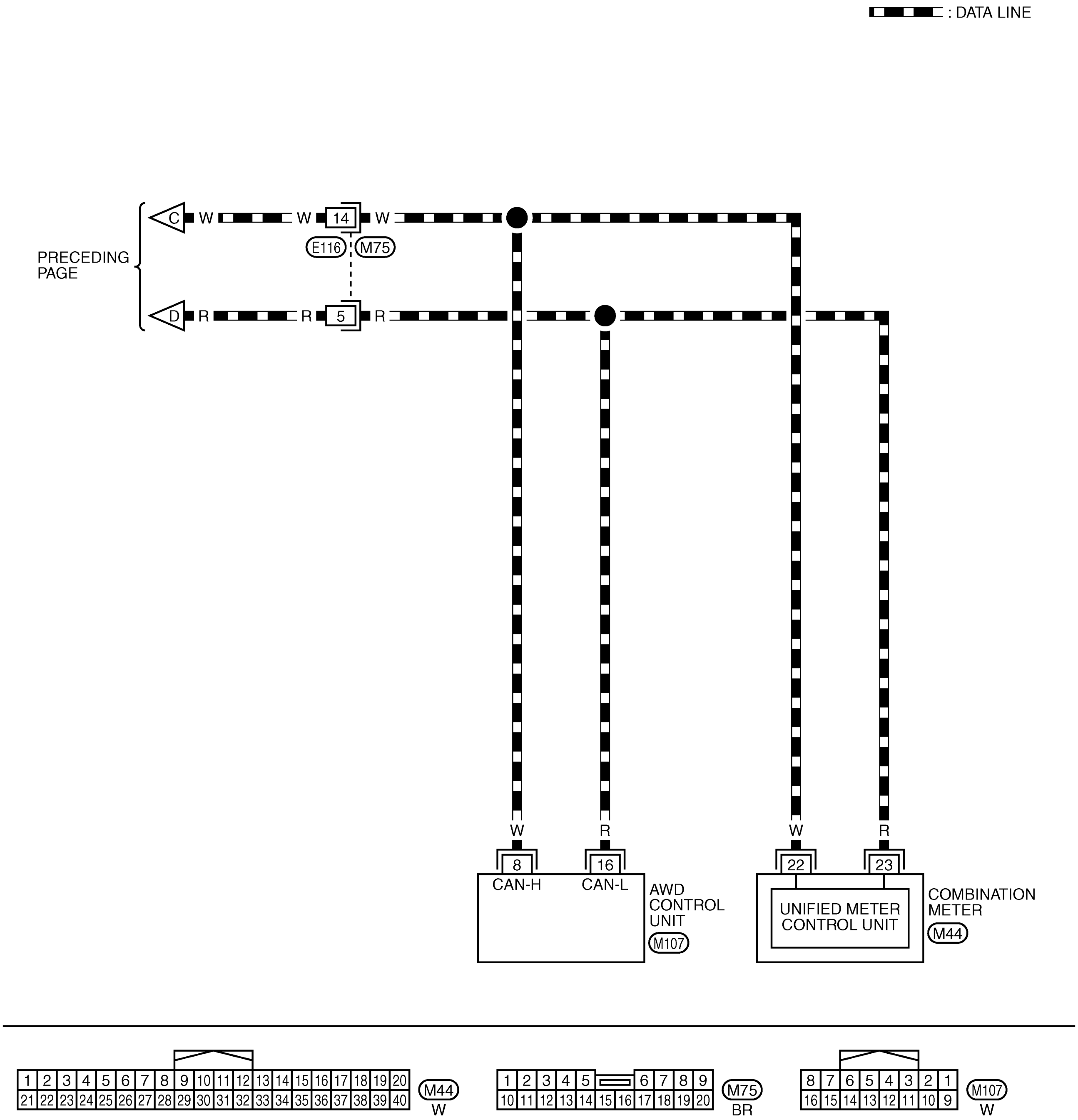
: DATA LINE
PRECEDING PAGE
C
D
W
R
14
5
E116
M75
W
R
8
16
CAN-H
CAN-L
AWD CONTROL UNIT
M107
22
23
UNIFIED METER CONTROL UNIT
COMBINATION METER
M44
W
BR
TKWB0217E

Check Sheet

AKS00BKF

NOTE:

If a check mark is put on “NG” on “INITIAL DIAG (Initial diagnosis)”, replace the control unit.

Check sheet table

SELECT SYSTEM screen	CAN DIAG SUPPORT MNTR					SELF-DIAG RESULTS	
	Initial diagnosis	Transmit diagnosis	Receive diagnosis				
			ECM	VDC/TCS /ABS	METER /M&A		
ENGINE	NG	UNKWN	—	—	UNKWN	CAN COMM CIRCUIT (U1000)	CAN COMM CIRCUIT (U1001)
ABS	NG	UNKWN	UNKWN	—	—	CAN COMM CIRCUIT (U1000)	—
ALL MODE AWD/4WD	NG	UNKWN	UNKWN	UNKWN	—	CAN COMM CIRCUIT (U1000)	—

Symptoms :

Attach copy of ENGINE SELF-DIAG RESULTS

Attach copy of ABS SELF-DIAG RESULTS

Attach copy of ALL MODE AWD/4WD SELF-DIAG RESULTS

Attach copy of ENGINE CAN DIAG SUPPORT MNTR

Attach copy of ABS CAN DIAG SUPPORT MNTR

Attach copy of ALL MODE AWD/4WD CAN DIAG SUPPORT MNTR

PKIA8761E

CHECK SHEET RESULTS (EXAMPLE)

NOTE:

If a check mark is put on “NG” on “INITIAL DIAG (Initial diagnosis)”, replace the control unit.

Case 1

Check harness between ABS actuator and electric unit (control unit) and AWD control unit. Refer to LAN-48, "Between ABS Actuator and Electric Unit (Control Unit) and AWD Control Unit Circuit Inspection" .

SELECT SYSTEM screen	CAN DIAG SUPPORT MNTR					SELF-DIAG RESULTS	
	Initial diagnosis	Transmit diagnosis	Receive diagnosis				
			ECM	VDC/TCS /ABS	METER /M&A		
ENGINE	NG	UNKWN	–	–	UNKWN ✓	CAN COMM CIRCUIT (U1000)	CAN COMM CIRCUIT (U1001) ✓
ABS	NG	UNKWN	UNKWN	–	–	CAN COMM CIRCUIT (U1000)	–
ALL MODE AWD/4WD	NG	UNKWN	UNKWN ✓	UNKWN ✓	–	CAN COMM CIRCUIT (U1000) ✓	–

PKIA8762E

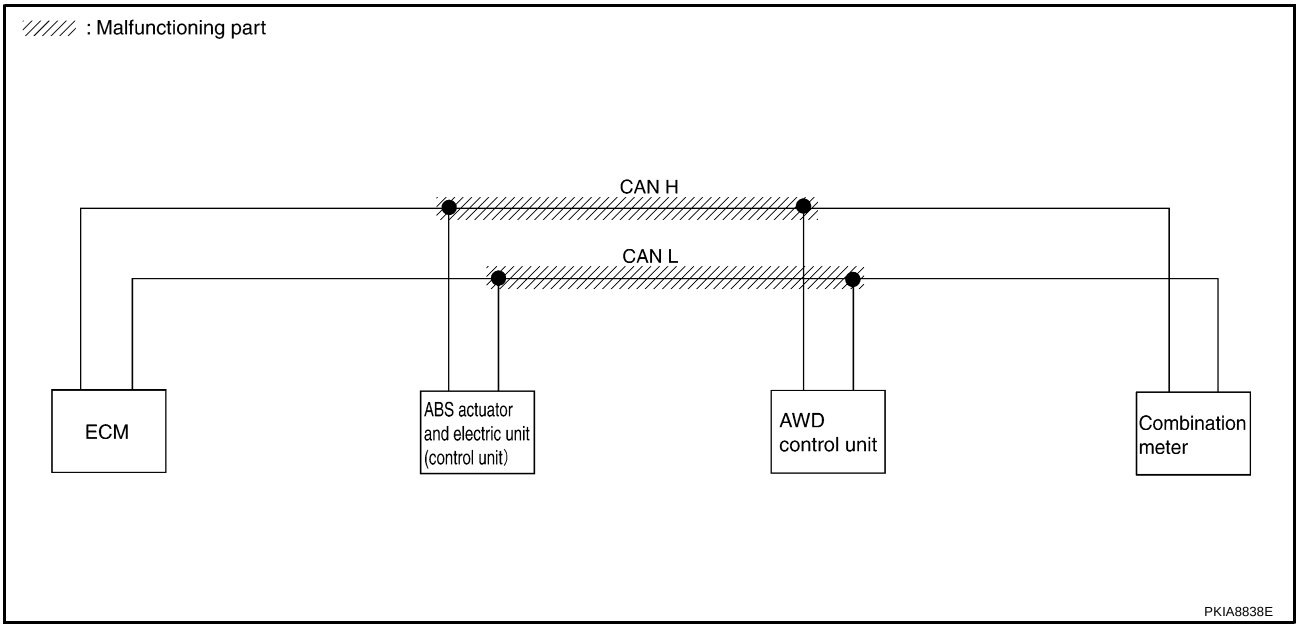

A B C D E F G H I J LAN L M

Case 2

Check ECM circuit. Refer to LAN-49, "ECM Circuit Inspection" .

SELECT SYSTEM screen	CAN DIAG SUPPORT MNTR					SELF-DIAG RESULTS	
	Initial diagnosis	Transmit diagnosis	Receive diagnosis				
			ECM	VDC/TCS /ABS	METER /M&A		
ENGINE	NG	UNKWN ✓	–	–	UNKWN ✓	CAN COMM CIRCUIT (U1000) ✓	CAN COMM CIRCUIT (U1001) ✓
ABS	NG	UNKWN	UNKWN ✓	–	–	CAN COMM CIRCUIT (U1000) ✓	–
ALL MODE AWD/4WD	NG	UNKWN	UNKWN ✓	UNKWN	–	CAN COMM CIRCUIT (U1000) ✓	–

PKIA8763E

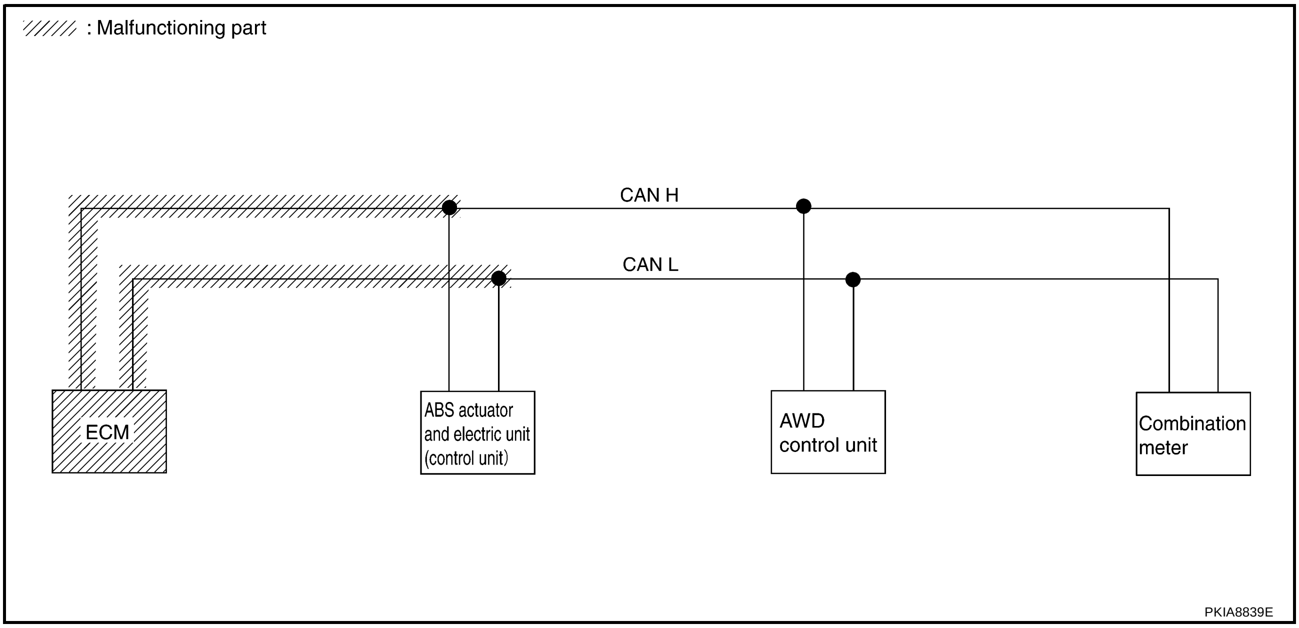

Case 3

Check ABS actuator and electric unit (control unit) circuit. Refer to LAN-49, "ABS Actuator and Electric Unit (Control Unit) Circuit Inspection" .

SELECT SYSTEM screen	CAN DIAG SUPPORT MNTR					SELF-DIAG RESULTS	
	Initial diagnosis	Transmit diagnosis	Receive diagnosis				
			ECM	VDC/TCS /ABS	METER /M&A		
ENGINE	NG	UNKWN	–	–	UNKWN	CAN COMM CIRCUIT (U1000)	CAN COMM CIRCUIT (U1001)
ABS	NG	UNKWN ✓	UNKWN	–	–	CAN COMM CIRCUIT (U1000) ✓	–
ALL MODE AWD/4WD	NG	UNKWN	UNKWN	UNKWN ✓	–	CAN COMM CIRCUIT (U1000) ✓	–

PKIA8764E

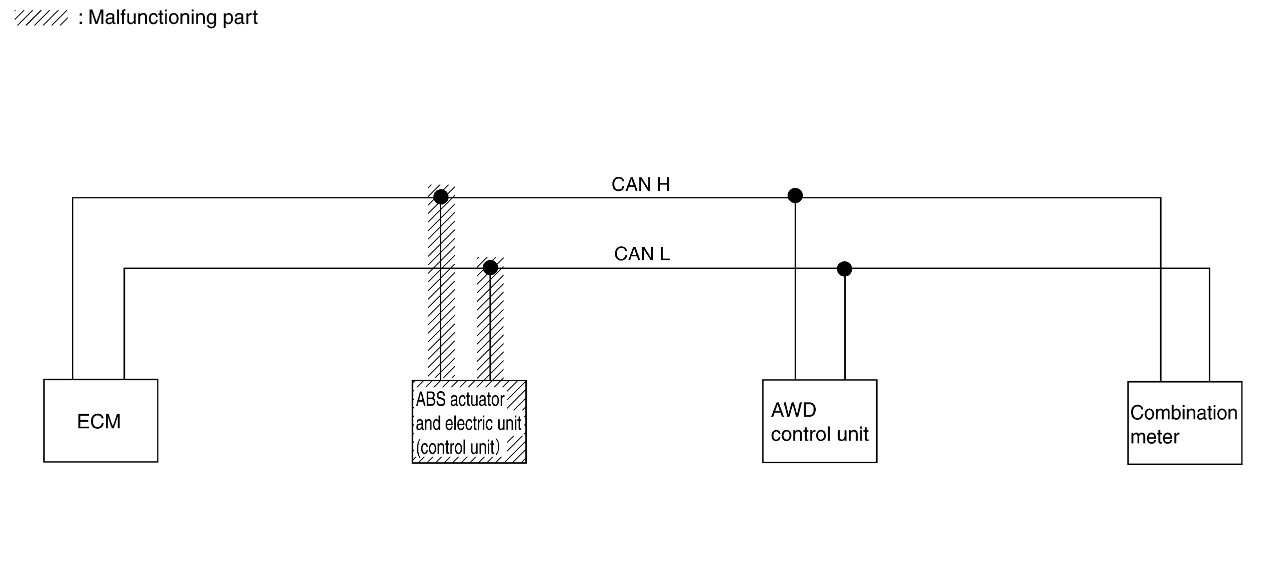

PKIA8840E

Case 4

Check AWD control unit circuit. Refer to LAN-50, "AWD Control Unit Circuit Inspection" .

SELECT SYSTEM screen	CAN DIAG SUPPORT MNTR					SELF-DIAG RESULTS	
	Initial diagnosis	Transmit diagnosis	Receive diagnosis				
			ECM	VDC/TCS /ABS	METER /M&A		
ENGINE	NG	UNKWN	–	–	UNKWN	CAN COMM CIRCUIT (U1000)	CAN COMM CIRCUIT (U1001)
ABS	NG	UNKWN	UNKWN	–	–	CAN COMM CIRCUIT (U1000)	–
ALL MODE AWD/4WD	NG	UNKWN	UNKWN	UNKWN	–	CAN COMM CIRCUIT (U1000)	–

PKIA8765E

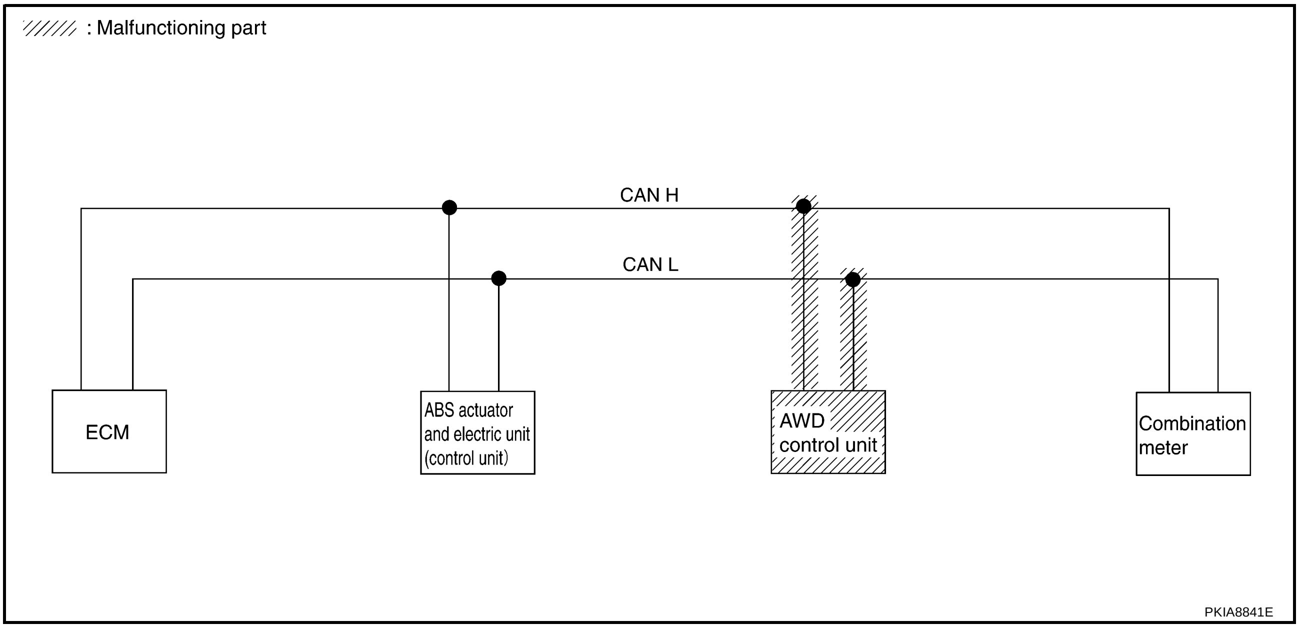

Case 5

Check combination meter circuit. Refer to LAN-50, "Combination Meter Circuit Inspection" .

SELECT SYSTEM screen	CAN DIAG SUPPORT MNTR					SELF-DIAG RESULTS	
	Initial diagnosis	Transmit diagnosis	Receive diagnosis				
			ECM	VDC/TCS /ABS	METER /M&A		
ENGINE	NG	UNKWN	–	–	UNKWN ✓	CAN COMM CIRCUIT (U1000)	CAN COMM CIRCUIT (U1001) ✓
ABS	NG	UNKWN	UNKWN	–	–	CAN COMM CIRCUIT (U1000)	–
ALL MODE AWD/4WD	NG	UNKWN	UNKWN	UNKWN	–	CAN COMM CIRCUIT (U1000)	–

PKIA8766E

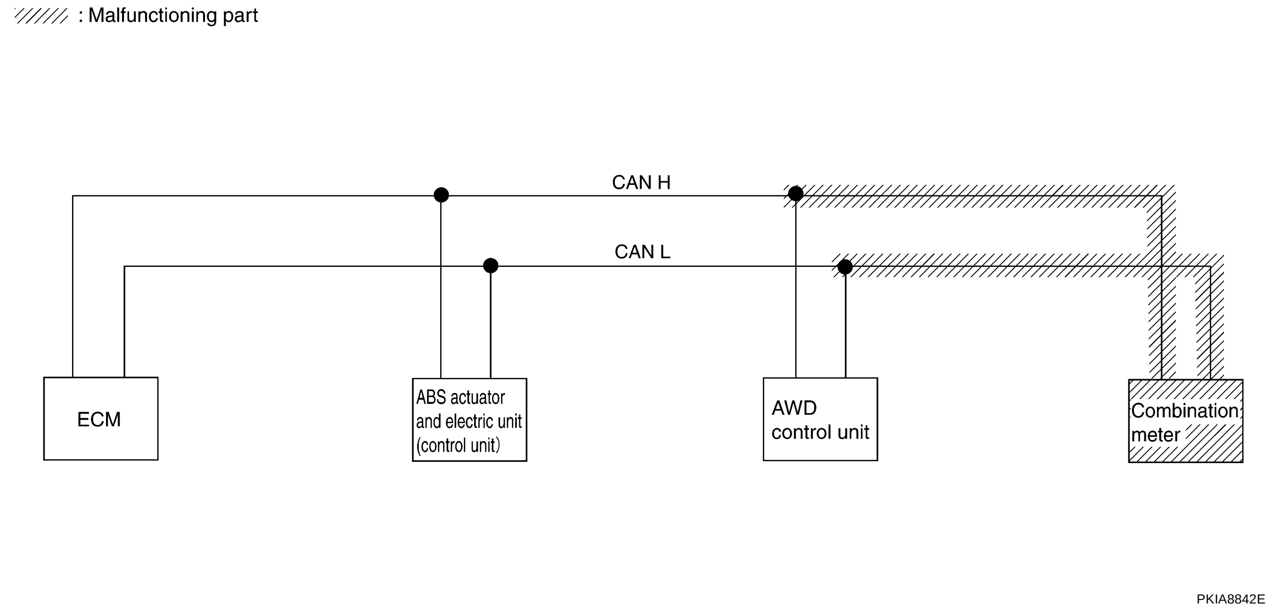

PKIA8842E

Case 6

Check CAN communication circuit. Refer to LAN-51, "CAN Communication Circuit Inspection" .

SELECT SYSTEM screen	CAN DIAG SUPPORT MNTR					SELF-DIAG RESULTS	
	Initial diagnosis	Transmit diagnosis	Receive diagnosis				
			ECM	VDC/TCS /ABS	METER /M&A		
ENGINE	NG	UNKWN	–	–	UNKWN	CAN COMM CIRCUIT (U1000)	CAN COMM CIRCUIT (U1001)
ABS	NG	UNKWN	UNKWN	–	–	CAN COMM CIRCUIT (U1000)	–
ALL MODE AWD/4WD	NG	UNKWN	UNKWN	UNKWN	–	CAN COMM CIRCUIT (U1000)	–

PKIA8767E

Between ABS Actuator and Electric Unit (Control Unit) and AWD Control Unit Circuit Inspection

AKS00BKG

1. CHECK CONNECTOR

1. Turn ignition switch OFF.
2. Disconnect battery cable at negative terminal.
3. Check following terminals and connectors for damage, bend and loose connection (connector side and harness side).

– Harness connector E116
– Harness connector M75

OK or NG

OK >> GO TO 2.
NG >> Repair terminal or connector.

2. CHECK HARNESS FOR OPEN CIRCUIT

1. Disconnect ABS actuator and electric unit (control unit) connector and harness connector E116.
2. Check continuity between ABS actuator and electric unit (control unit) harness connector E69 terminals 20 (W), 23 (R) and harness connector E116 terminals 14 (W), 5 (R).

20 (W) – 14 (W) : Continuity should exist.
23 (R) – 5 (R) : Continuity should exist.

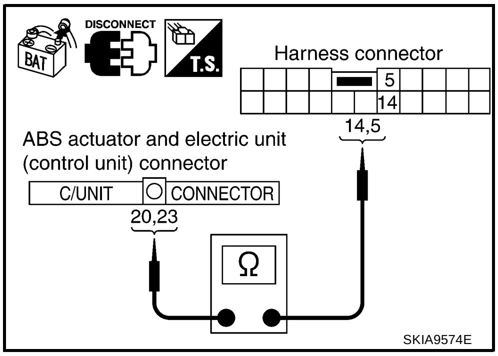

SKIA9574E

OK or NG

OK >> GO TO 3.
NG >> Repair harness.

3. CHECK HARNESS FOR OPEN CIRCUIT

1. Disconnect AWD control unit connector.
2. Check continuity between harness connector M75 terminals 14 (W), 5 (R) and AWD control unit harness connector M107 terminals 8 (W), 16 (R).

14 (W) – 8 (W) : Continuity should exist.
5 (R) – 16 (R) : Continuity should exist.

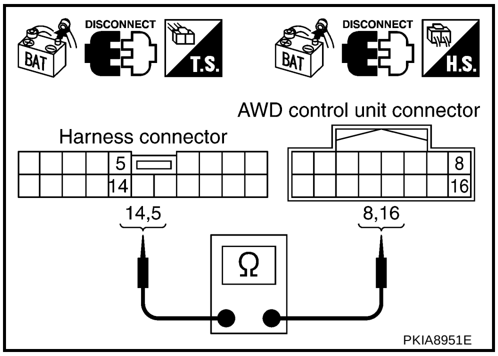

PKIA8951E

OK or NG

OK >> Connect all the connectors and diagnose again. Refer to LAN-4, "TROUBLE DIAGNOSES WORK FLOW" .
NG >> Repair harness.

ECM Circuit Inspection

AKS00BKH

1. CHECK CONNECTOR

1. Turn ignition switch OFF.
2. Disconnect battery cable at negative terminal.
3. Check following terminals and connectors for damage, bend and loose connection (control module side and harness side).

- ECM connector
- Harness connector M75
- Harness connector E116

OK or NG

OK >> GO TO 2.
NG >> Repair terminal or connector.

2. CHECK HARNESS FOR OPEN CIRCUIT

1. Disconnect ECM connector.
2. Check resistance between ECM harness connector M118 terminals 94 (G/R) and 86 (GY/R).

94 (G/R) – 86 (GY/R) : Approx. 108 – 132Ω

OK or NG

OK >> Replace ECM.
NG >> Repair harness between ECM and ABS actuator and electric unit (control unit).

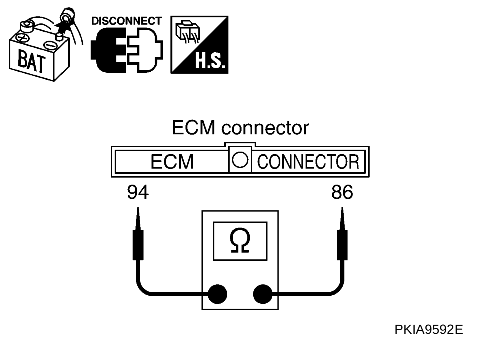

PKIA9592E

ABS Actuator and Electric Unit (Control Unit) Circuit Inspection

AKS00BKI

1. CHECK CONNECTOR

1. Turn ignition switch OFF.
2. Disconnect battery cable at negative terminal.
3. Check terminals and connector of ABS actuator and electric unit (control unit) for damage, bend and loose connection (control unit side and harness side).

OK or NG

OK >> GO TO 2.
NG >> Repair terminal or connector.

2. CHECK HARNESS FOR OPEN CIRCUIT

1. Disconnect ABS actuator and electric unit (control unit) connector.
2. Check resistance between ABS actuator and electric unit (control unit) harness connector E69 terminals 20 (W) and 23 (R).

20 (W) – 23 (R) : Approx. 54 – 66Ω

OK or NG

OK >> Replace ABS actuator and electric unit (control unit).
NG >> Repair harness between ABS actuator and electric unit (control unit) and harness connector E116.

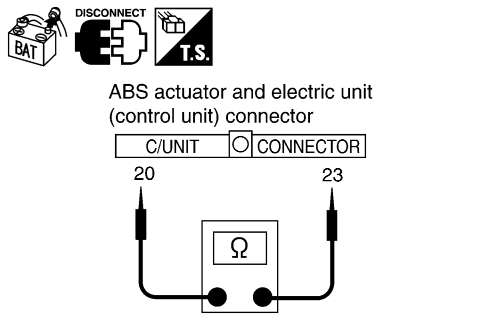

SKIA9769E

AWD Control Unit Circuit Inspection

AKS00BKJ

1. CHECK CONNECTOR

1. Turn ignition switch OFF.
2. Disconnect battery cable at negative terminal.
3. Check terminals and connector of AWD control unit for damage, bend and loose connection (control unit side and harness side).

OK or NG

OK >> GO TO 2.
NG >> Repair terminal or connector.

2. CHECK HARNESS FOR OPEN CIRCUIT

1. Disconnect AWD control unit connector.
2. Check resistance between AWD control unit harness connector M107 terminals 8 (W) and 16 (R).

8 (W) – 16 (R) : Approx. 54 – 66Ω

OK or NG

OK >> Replace AWD control unit.
NG >> Repair harness between AWD control unit and combination meter.

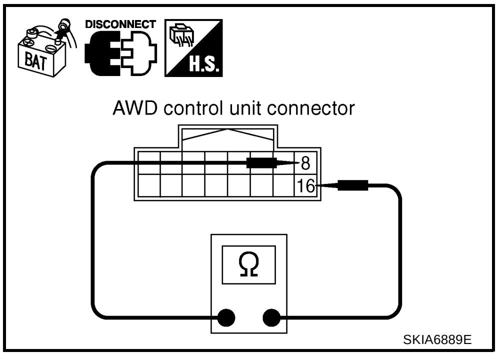

SKIA6889E

Combination Meter Circuit Inspection

AKS00BKK

1. CHECK CONNECTOR

1. Turn ignition switch OFF.
2. Disconnect battery cable at negative terminal.
3. Check terminals and connector of combination meter for damage, bend and loose connection (meter side and harness side).

OK or NG

OK >> GO TO 2.
NG >> Repair terminal or connector.

2. CHECK HARNESS FOR OPEN CIRCUIT

1. Disconnect combination meter connector.
2. Check resistance between combination meter harness connector M44 terminals 22 (W) and 23 (R).

22 (W) – 23 (R) : Approx. 108 – 132Ω

OK or NG

OK >> Replace combination meter.
NG >> Repair harness between combination meter and AWD control unit.

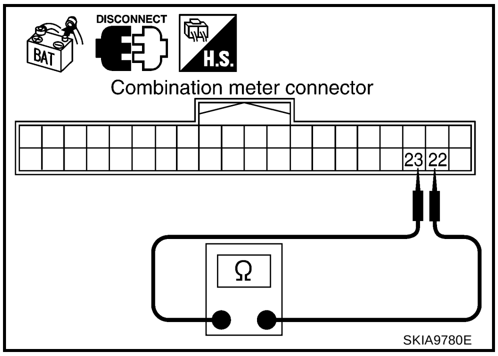

SKIA9780E

CAN Communication Circuit Inspection

AKS00BKL

1. CHECK CONNECTOR

1. Turn ignition switch OFF.
2. Disconnect battery cable at negative terminal.
3. Check following terminals and connectors for damage, bend and loose connection (control module side, control unit side, meter side, connector side and harness side).

- ECM
- ABS actuator and electric unit (control unit)
- AWD control unit
- Combination meter
- Between ECM and combination meter

OK or NG

OK >> GO TO 2.
NG >> Repair terminal or connector.

2. CHECK HARNESS FOR SHORT CIRCUIT

1. Disconnect ECM connector and harness connector M75.
2. Check continuity between ECM harness connector M118 terminals 94 (G/R) and 86 (GY/R).

94 (G/R) – 86 (GY/R) : Continuity should not exist.

OK or NG

OK >> GO TO 3.
NG >> Repair harness between ECM and harness connector M75.

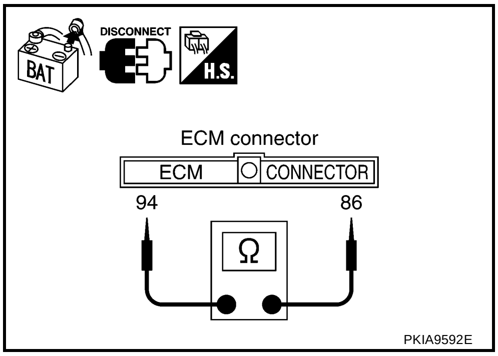

3. CHECK HARNESS FOR SHORT CIRCUIT

Check continuity between ECM harness connector M118 terminals 94 (G/R), 86 (GY/R) and ground.

94 (G/R) – Ground : Continuity should not exist.
86 (GY/R) – Ground : Continuity should not exist.

OK or NG

OK >> GO TO 4.
NG >> Repair harness between ECM and harness connector M75.

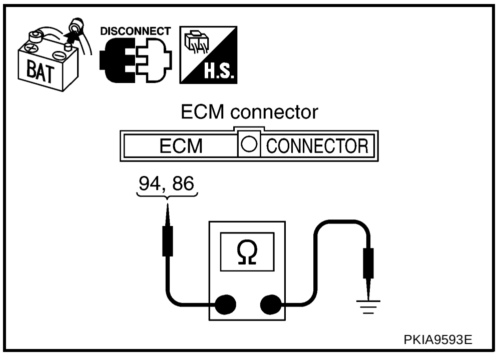

4. CHECK HARNESS FOR SHORT CIRCUIT

1. Disconnect ABS actuator and electric unit (control unit) connector.
2. Check continuity between ABS actuator and electric unit (control unit) harness connector E69 terminals 20 (W) and 23 (R).

20 (W) – 23 (R) : Continuity should not exist.

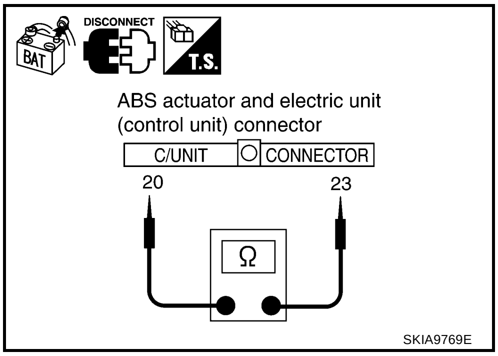

SKIA9769E

OK or NG

OK >> GO TO 5.
NG >> Repair harness between ABS actuator and electric unit (control unit) and harness connector E116.

5. CHECK HARNESS FOR SHORT CIRCUIT

Check continuity between ABS actuator and electric unit (control unit) harness connector E69 terminals 20 (W), 23 (R) and ground.

20 (W) – Ground : Continuity should not exist.
23 (R) – Ground : Continuity should not exist.

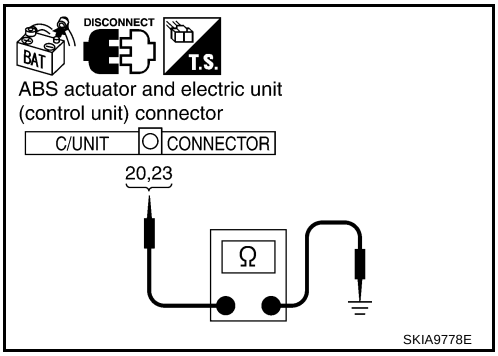

SKIA9778E

OK or NG

OK >> GO TO 6.
NG >> Repair harness between ABS actuator and electric unit (control unit) and harness connector E116.

6. CHECK HARNESS FOR SHORT CIRCUIT

1. Disconnect AWD control unit connector and combination meter connector.
2. Check continuity between combination meter harness connector M44 terminals 22 (W) and 23 (R).

22 (W) – 23 (R) : Continuity should not exist.

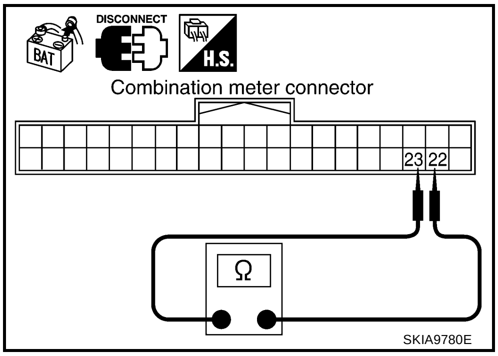

SKIA9780E

OK or NG

OK >> GO TO 7.
NG >> Check the following harness. If any harness is damaged, repair the harness.
- Harness between combination meter and AWD control unit
- Harness between combination meter and harness connector M75

7. CHECK HARNESS FOR SHORT CIRCUIT

Check continuity between combination meter harness connector M44 terminals 22 (W), 23 (R) and ground.

22 (W) – Ground : Continuity should not exist.
23 (R) – Ground : Continuity should not exist.

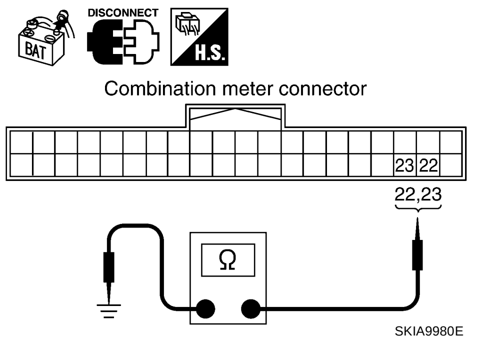

SKIA9980E

OK or NO

OK >> GO TO 8.
NG >> Check the following harness. If any harness is damaged, repair the harness.
- Harness between combination meter and AWD control unit
- Harness between combination meter and harness connector M75

8. CHECK ECM AND COMBINATION METER INTERNAL CIRCUIT

1. Remove ECM and combination meter from vehicle.
2. Check resistance between ECM terminals 94 and 86.
3. Check resistance between combination meter terminals 22 and 23.

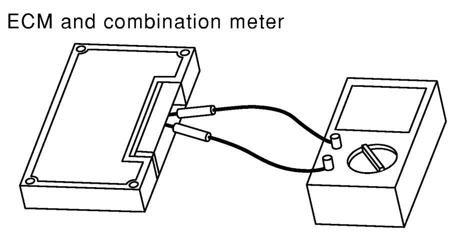

PKIA0830E

Unit	Terminal	Resistance (Ω) (Approx.)
ECM	94 – 86	108 – 132
Combination meter	22 – 23	

OK or NG

OK >> GO TO 9.
NG >> Replace ECM and/or combination meter.

9. CHECK SYMPTOM

1. Fill in described symptoms on the column “Symptom” in the check sheet.
2. Connect all connectors, and then make sure that the symptom is reproduced.

OK or NG

OK >> GO TO 10.
NG >> Refer to LAN-11, "Example of Filling in Check Sheet When Initial Conditions Are Not Reproduced" .

10. CHECK UNIT REPRODUCIBILITY

Performs the following procedure for each unit, and then perform reproducibility test.

1. Turn ignition switch OFF.
2. Disconnect battery cable at negative terminal.
3. Disconnect the unit connector.
4. Connect battery cable at negative terminal.
5. Make sure that the symptom filled in the “Symptom” of the check sheet is reproduced. (Do not confuse it with the symptom related to removed unit.)
6. Make sure that the same symptom is reproduced.

- ABS actuator and electric unit (control unit)
- AWD control unit
- ECM
- Combination meter

<u>Check results</u>

Reproduce>>Install removed unit, and then check the other units.
Not reproduced>>Replace removed unit.

CAN SYSTEM (TYPE 3)

PFP:23710

Component Parts and Harness Connector Location

AKS00BKO

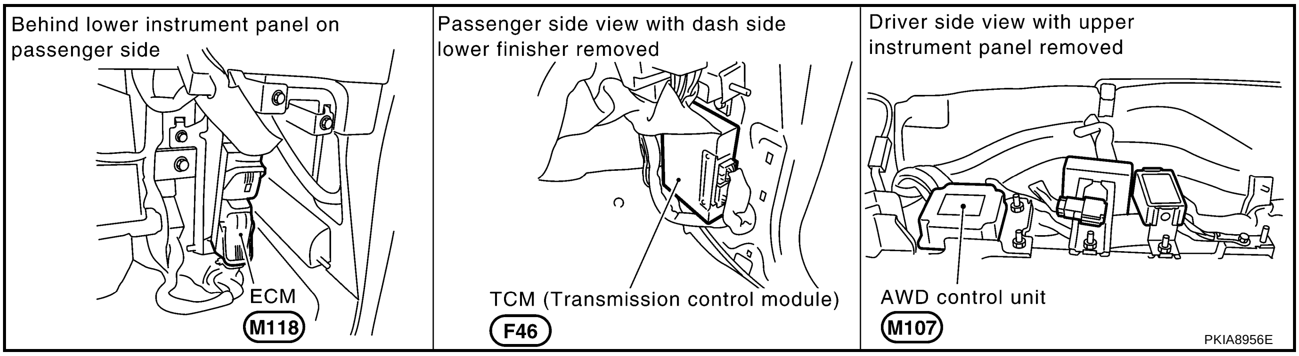

Wiring Diagram — CAN —

AKS00BKP

LAN-CAN-05

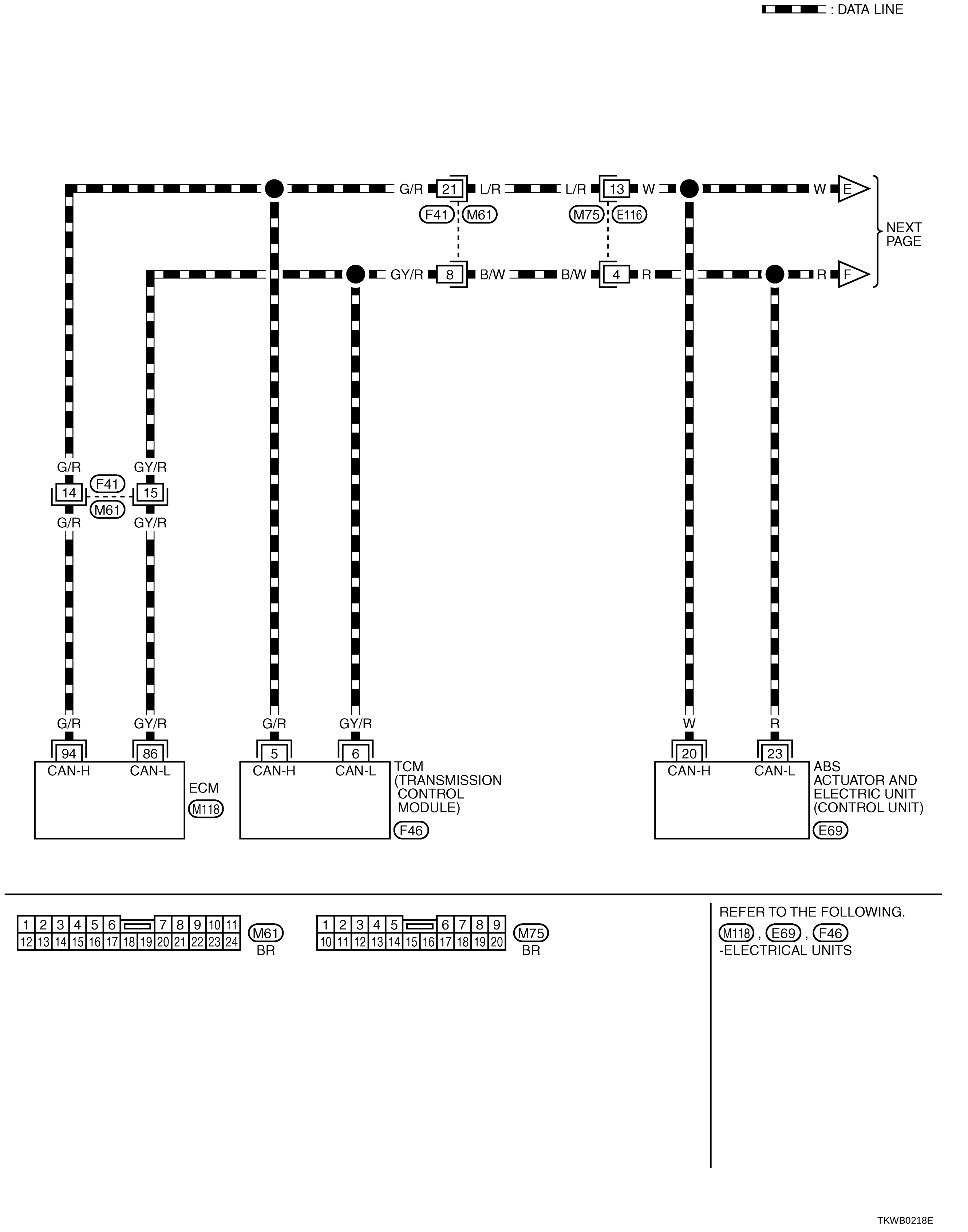

LAN-CAN-06

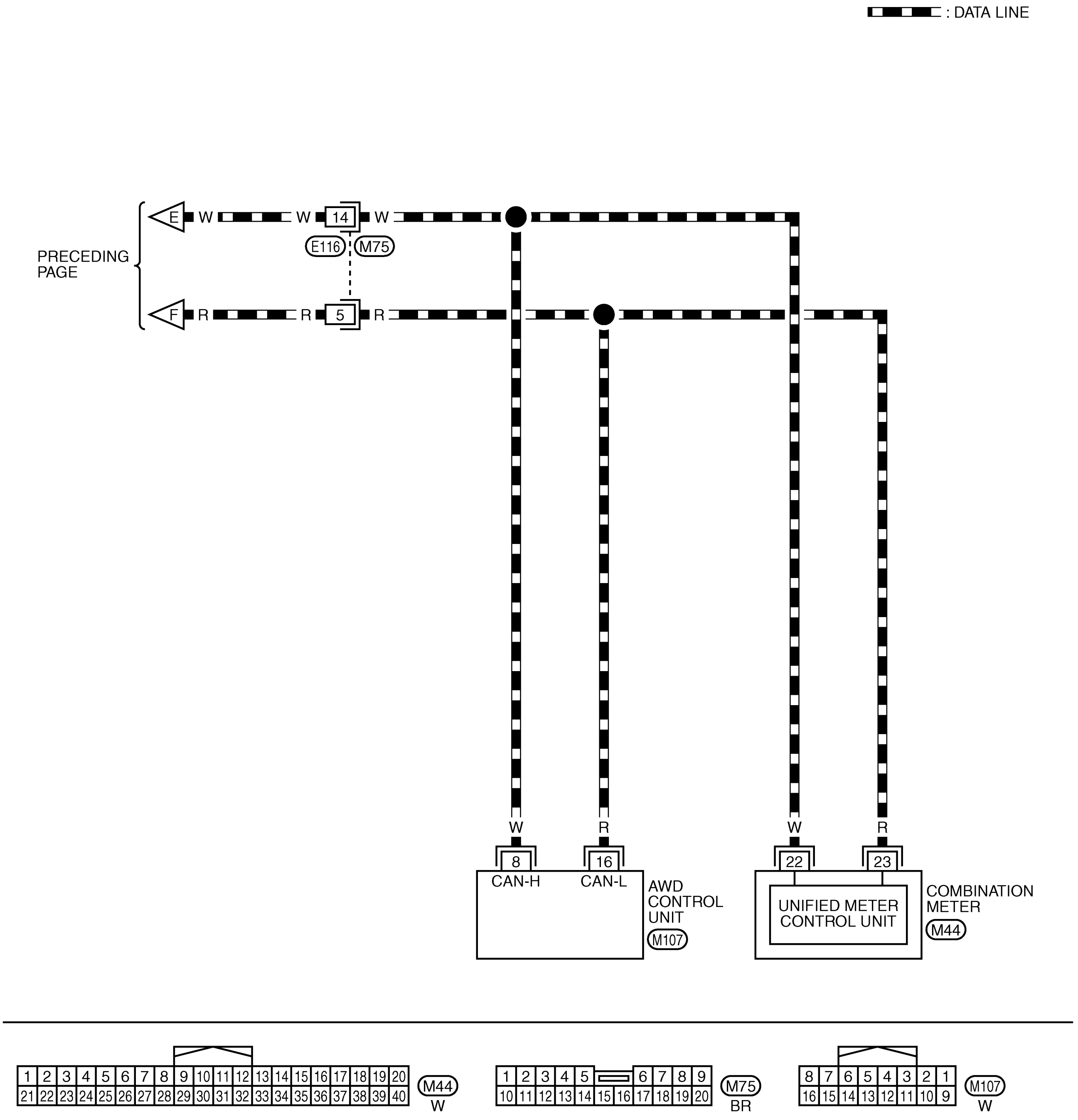

TKWB0219E

Check Sheet

AKS00BKQ

NOTE:

If a check mark is put on “NG” on “INITIAL DIAG (Initial diagnosis)”, replace the control unit.

Check sheet table

SELECT SYSTEM screen	CAN DIAG SUPPORT MNTR						SELF-DIAG RESULTS	
	Initial diagnosis	Transmit diagnosis	Receive diagnosis					
			ECM	TCM	VDC/TCS /ABS	METER /M&A		
ENGINE	NG	UNKWN	—	UNKWN	—	UNKWN	CAN COMM CIRCUIT (U1000)	CAN COMM CIRCUIT (U1001)
A/T	NG	UNKWN	UNKWN	—	—	UNKWN	CAN COMM CIRCUIT (U1000)	—
ABS	NG	UNKWN	UNKWN	—	—	—	CAN COMM CIRCUIT (U1000)	—
ALL MODE AWD/4WD	NG	UNKWN	UNKWN	—	UNKWN	—	CAN COMM CIRCUIT (U1000)	—

Symptoms :

Attach copy of ENGINE SELF-DIAG RESULTS	Attach copy of A/T SELF-DIAG RESULTS	Attach copy of ABS SELF-DIAG RESULTS	Attach copy of ALL MODE AWD/4WD SELF-DIAG RESULTS
Attach copy of ENGINE CAN DIAG SUPPORT MNTR	Attach copy of A/T CAN DIAG SUPPORT MNTR	Attach copy of ABS CAN DIAG SUPPORT MNTR	Attach copy of ALL MODE AWD/4WD CAN DIAG SUPPORT MNTR

PKIA8768E

CHECK SHEET RESULTS (EXAMPLE)

NOTE:

If a check mark is put on “NG” on “INITIAL DIAG (Initial diagnosis)”, replace the control unit.

Case 1

Check harness between TCM and ABS actuator and electric unit (control unit). Refer to LAN-66, "Between TCM and ABS Actuator and Electric Unit (Control Unit) Circuit Inspection" .

SELECT SYSTEM screen	CAN DIAG SUPPORT MNTR							SELF-DIAG RESULTS	
	Initial diagnosis	Transmit diagnosis	Receive diagnosis						
			ECM	TCM	VDC/TCS /ABS	METER /M&A			
ENGINE	NG	UNKWN	–	UNKWN	–	UNKWN ✓		CAN COMM CIRCUIT (U1000)	CAN COMM CIRCUIT (U1001) ✓
A/T	NG	UNKWN	UNKWN	–	–	–		–	–
ABS	NG	UNKWN	UNKWN ✓	–	–	–		CAN COMM CIRCUIT (U1000) ✓	–
ALL MODE AWD/4WD	NG	UNKWN	UNKWN ✓	–	UNKWN	–		CAN COMM CIRCUIT (U1000) ✓	–

PKIA8769E

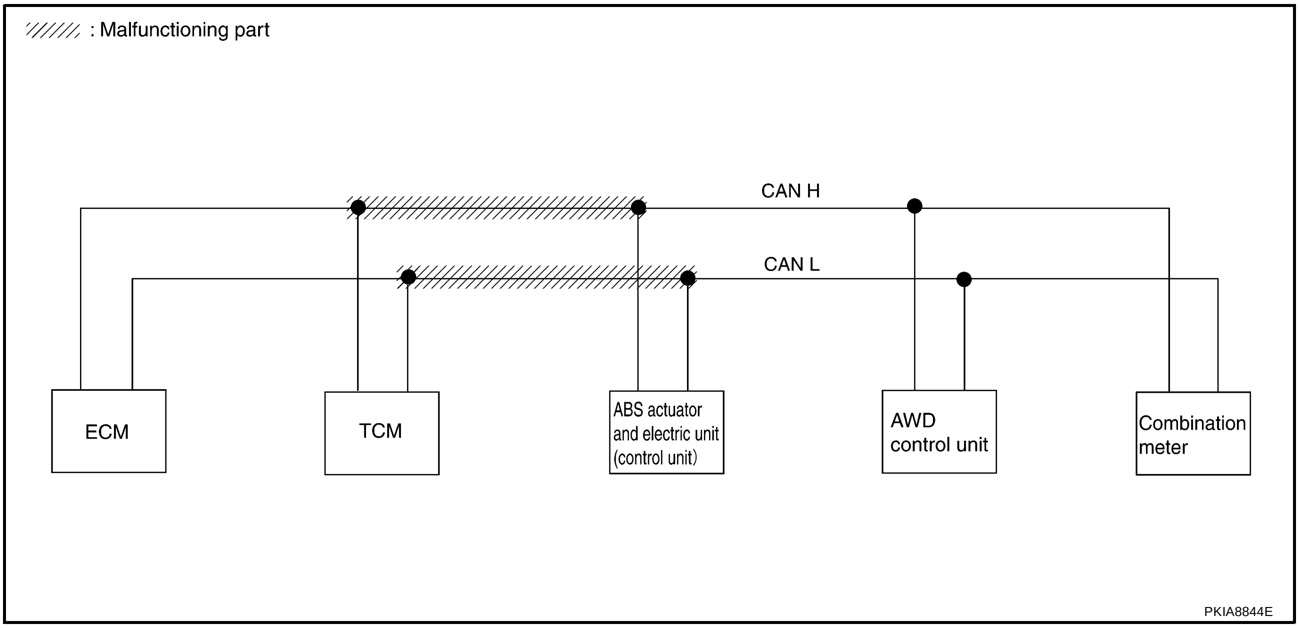

PKIA8844E

Case 2

Check harness between ABS actuator and electric unit (control unit) and AWD control unit. Refer to LAN-67, "Between ABS Actuator and Electric Unit (Control Unit) and AWD Control Unit Circuit Inspection" .

SELECT SYSTEM screen	CAN DIAG SUPPORT MNTR						SELF-DIAG RESULTS	
	Initial diagnosis	Transmit diagnosis	Receive diagnosis					
			ECM	TCM	VDC/TCS /ABS	METER /M&A		
ENGINE	NG	UNKWN	–	UNKWN	–	UNKWN ✓	CAN COMM CIRCUIT (U1000)	CAN COMM CIRCUIT (U1001) ✓
A/T	NG	UNKWN	UNKWN	–	–	–	–	–
ABS	NG	UNKWN	UNKWN	–	–	–	CAN COMM CIRCUIT (U1000)	–
ALL MODE AWD/4WD	NG	UNKWN	UNKWN ✓	–	UNKWN ✓	–	CAN COMM CIRCUIT (U1000) ✓	–

PKIA8770E

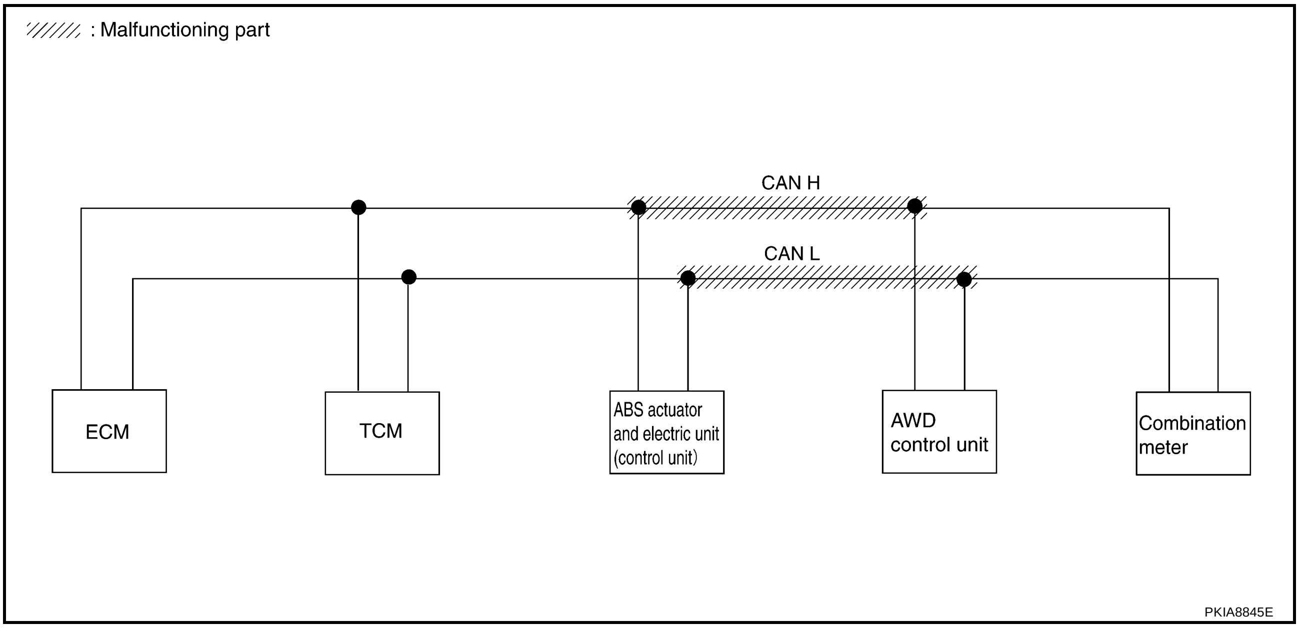

Case 3

Check ECM circuit. Refer to LAN-68, "ECM Circuit Inspection" .

SELECT SYSTEM screen	CAN DIAG SUPPORT MNTR						SELF-DIAG RESULTS	
	Initial diagnosis	Transmit diagnosis	Receive diagnosis					
			ECM	TCM	VDC/TCS /ABS	METER /M&A		
ENGINE	NG	UNKWN ✓	–	UNKWN ✓	–	UNKWN ✓	CAN COMM CIRCUIT (U1000) ✓	CAN COMM CIRCUIT (U1001) ✓
A/T	NG	UNKWN	–	–	–	UNKWN	–	–
ABS	NG	UNKWN	UNKWN ✓	–	–	–	CAN COMM CIRCUIT (U1000) ✓	–
ALL MODE AWD/4WD	NG	UNKWN	UNKWN ✓	–	UNKWN	–	CAN COMM CIRCUIT (U1000) ✓	–

PKIA8771E

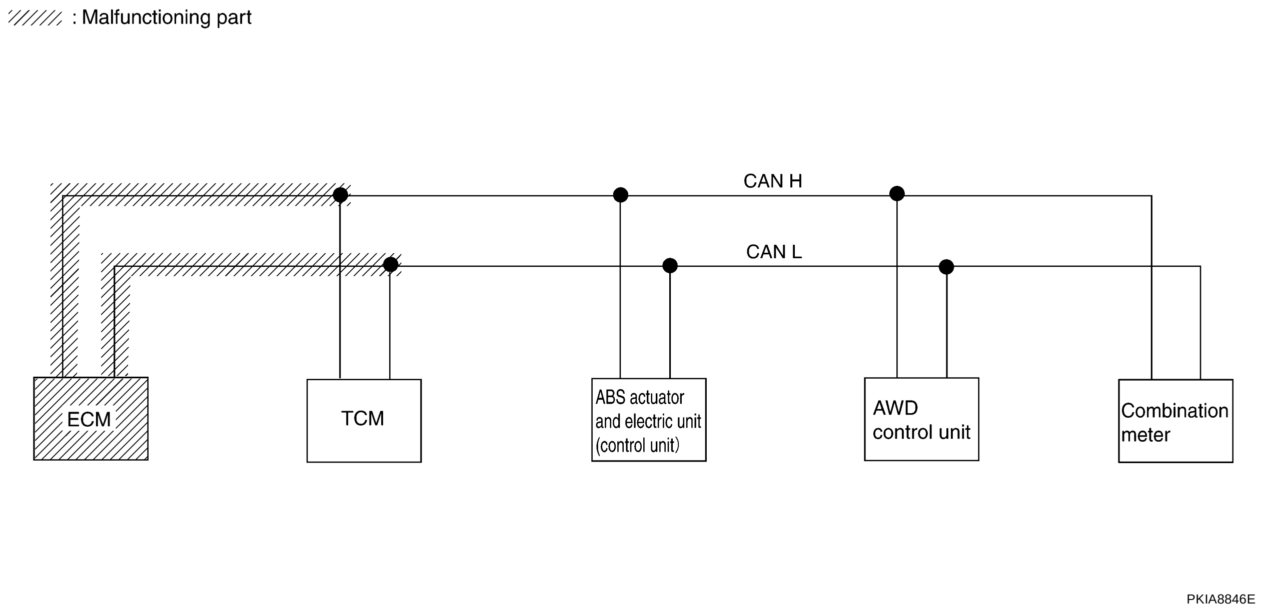

PKIA8846E

Case 4

Check TCM circuit. Refer to LAN-69, "TCM Circuit Inspection" .

SELECT SYSTEM screen	CAN DIAG SUPPORT MNTR						SELF-DIAG RESULTS	
	Initial diagnosis	Transmit diagnosis	Receive diagnosis					
			ECM	TCM	VDC/TCS /ABS	METER /M&A		
ENGINE	NG	UNKWN	–	UNKWN ✓	–	UNKWN	CAN COMM CIRCUIT (U1000) ✓	CAN COMM CIRCUIT (U1001) ✓
A/T	NG	–	–	–	–	–	–	–
ABS	NG	UNKWN	UNKWN	–	–	–	CAN COMM CIRCUIT (U1000)	–
ALL MODE AWD/4WD	NG	UNKWN	UNKWN	–	UNKWN	–	CAN COMM CIRCUIT (U1000)	–

PKIA8772E

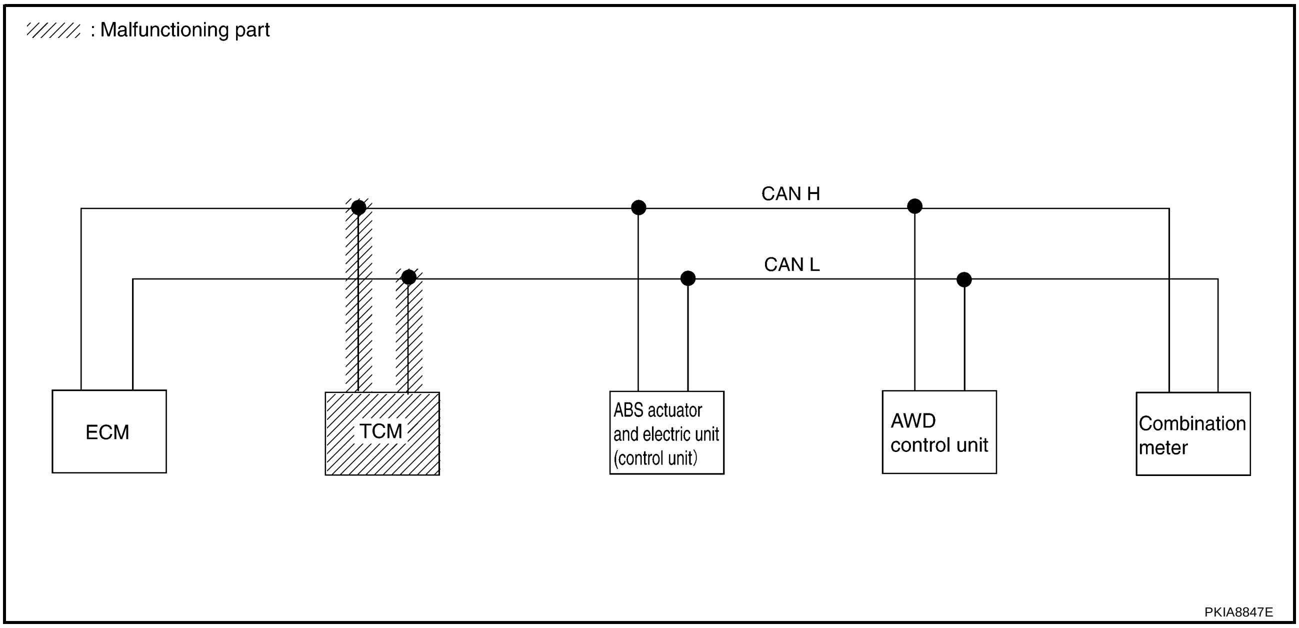

Case 5

Check ABS actuator and electric unit (control unit) circuit. Refer to LAN-69, "ABS Actuator and Electric Unit (Control Unit) Circuit Inspection" .

SELECT SYSTEM screen	CAN DIAG SUPPORT MNTR						SELF-DIAG RESULTS	
	Initial diagnosis	Transmit diagnosis	Receive diagnosis					
			ECM	TCM	VDC/TCS /ABS	METER /M&A		
ENGINE	NG	UNKWN	–	UNKWN	–	UNKWN	CAN COMM CIRCUIT (U1000)	CAN COMM CIRCUIT (U1001)
A/T	NG	UNKWN	UNKWN	–	–	UNKWN	CAN COMM CIRCUIT (U1000)	–
ABS	NG	UNKWN ✓	UNKWN	–	–	–	CAN COMM CIRCUIT (U1000) ✓	–
ALL MODE AWD/4WD	NG	UNKWN	UNKWN	–	UNKWN ✓	–	CAN COMM CIRCUIT (U1000) ✓	–

PKIA8773E

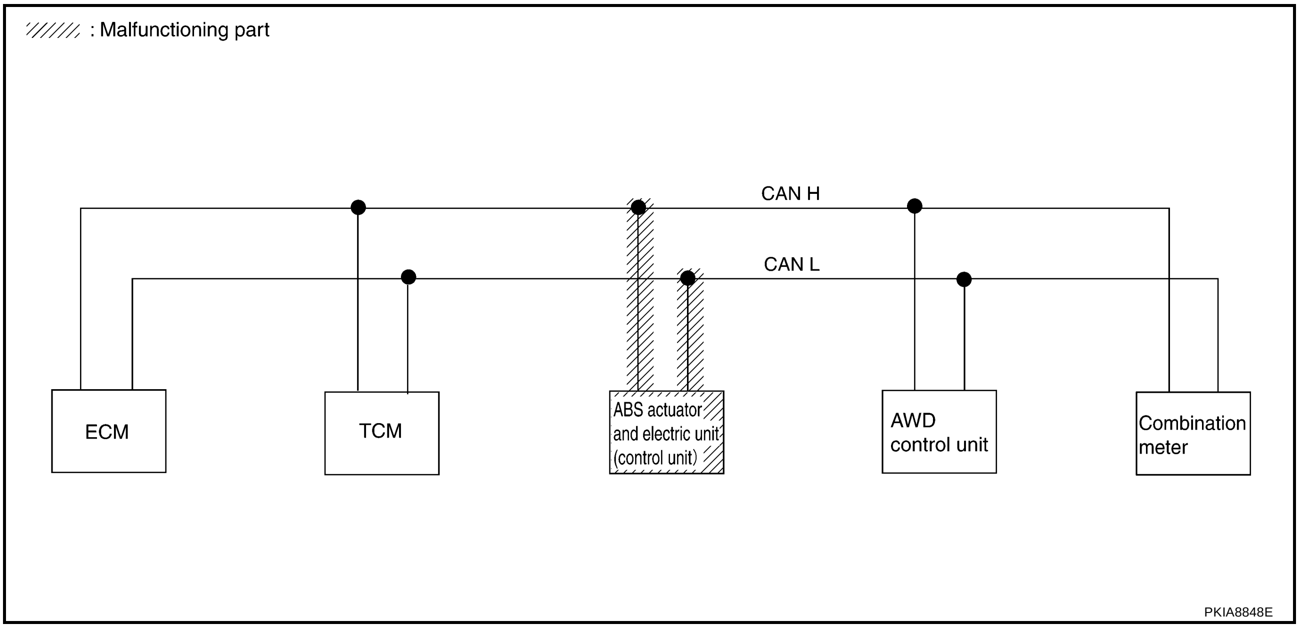

Case 6

Check AWD control unit circuit. Refer to LAN-70, "AWD Control Unit Circuit Inspection" .

SELECT SYSTEM screen	CAN DIAG SUPPORT MNTR						SELF-DIAG RESULTS	
	Initial diagnosis	Transmit diagnosis	Receive diagnosis					
			ECM	TCM	VDC/TCS /ABS	METER /M&A		
ENGINE	NG	UNKWN	—	UNKWN	—	UNKWN	CAN COMM CIRCUIT (U1000)	CAN COMM CIRCUIT (U1001)
A/T	NG	UNKWN	UNKWN	—	—	UNKWN	CAN COMM CIRCUIT (U1000)	—
ABS	NG	UNKWN	UNKWN	—	—	—	CAN COMM CIRCUIT (U1000)	—
ALL MODE AWD/4WD	NG	UNKWN ✓	UNKWN	—	UNKWN	—	CAN COMM CIRCUIT (U1000) ✓	—

PKIA8774E

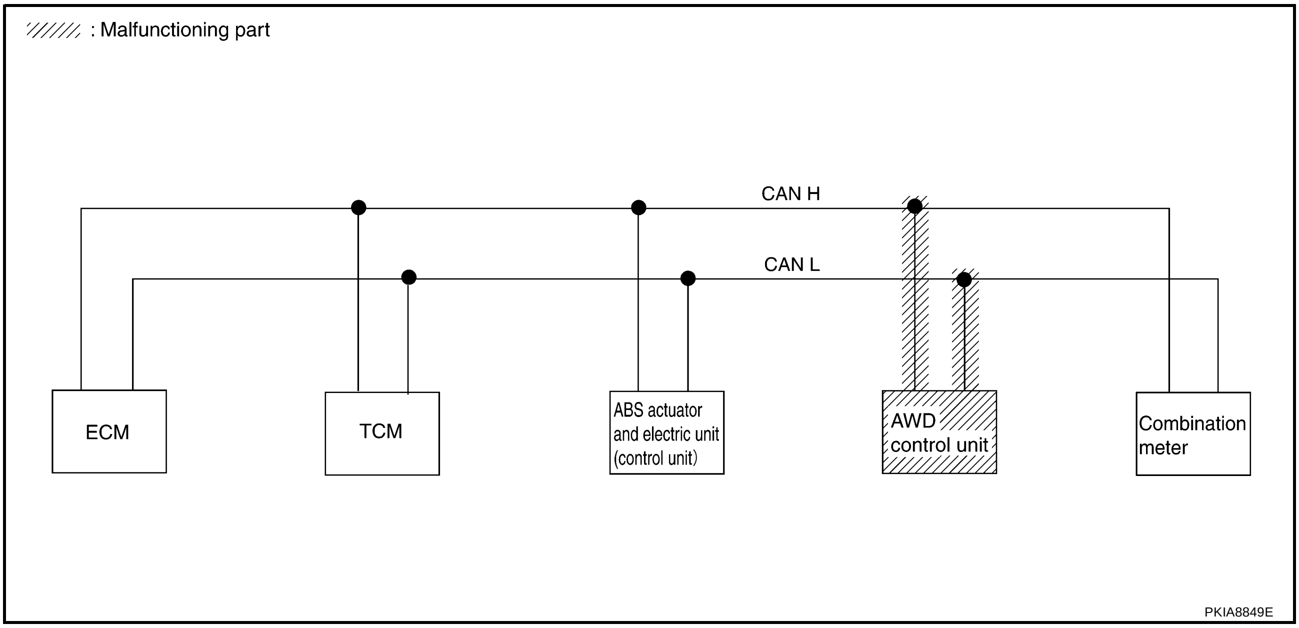

PKIA8849E

Case 7

Check combination meter circuit. Refer to LAN-70, "Combination Meter Circuit Inspection" .

SELECT SYSTEM screen	CAN DIAG SUPPORT MNTR						SELF-DIAG RESULTS	
	Initial diagnosis	Transmit diagnosis	Receive diagnosis					
			ECM	TCM	VDC/TCS /ABS	METER /M&A		
ENGINE	NG	UNKWN	–	UNKWN	–	UNKWN ✓	CAN COMM CIRCUIT (U1000)	CAN COMM CIRCUIT (U1001) ✓
A/T	NG	UNKWN	UNKWN	–	–	–	–	–
ABS	NG	UNKWN	UNKWN	–	–	–	CAN COMM CIRCUIT (U1000)	–
ALL MODE AWD/4WD	NG	UNKWN	UNKWN	–	UNKWN	–	CAN COMM CIRCUIT (U1000)	–

PKIA8775E

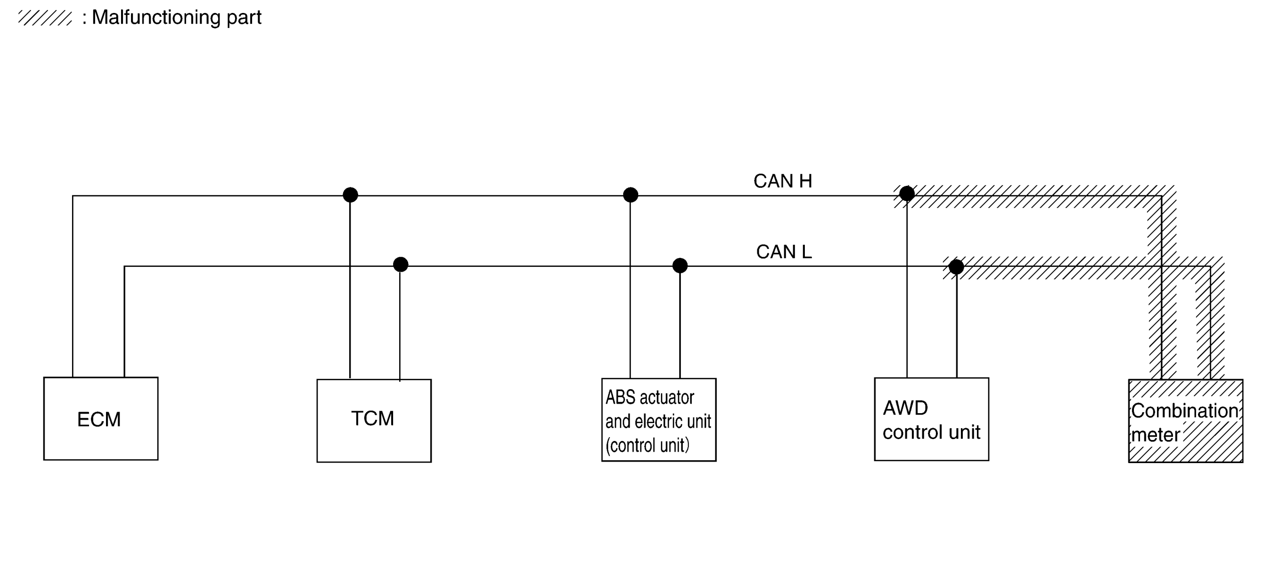

PKIA8850E

Case 8

Check CAN communication circuit. Refer to LAN-71, "CAN Communication Circuit Inspection" .

SELECT SYSTEM screen	CAN DIAG SUPPORT MNTR						SELF-DIAG RESULTS	
	Initial diagnosis	Transmit diagnosis	Receive diagnosis					
			ECM	TCM	VDC/TCS /ABS	METER /M&A		
ENGINE	NG	UNKWN ✓	–	UNKWN ✓	–	UNKWN ✓	CAN COMM CIRCUIT (U1000) ✓	CAN COMM CIRCUIT (U1001) ✓
A/T	NG	–	–	–	–	–	–	–
ABS	NG	UNKWN ✓	UNKWN	–	–	–	CAN COMM CIRCUIT (U1000) ✓	–
ALL MODE AWD/4WD	NG	UNKWN ✓	UNKWN	–	UNKWN	–	CAN COMM CIRCUIT (U1000) ✓	–

PKIA8776E

Between TCM and ABS Actuator and Electric Unit (Control Unit) Circuit Inspection

AKS00BKR

1. CHECK CONNECTOR

1. Turn ignition switch OFF.
2. Disconnect battery cable at negative terminal.
3. Check following terminals and connectors for damage, bend and loose connection (connector side and harness side).

- Harness connector F41
- Harness connector M61
- Harness connector M75
- Harness connector E116

OK or NG

OK >> GO TO 2.
NG >> Repair terminal or connector.

2. CHECK HARNESS FOR OPEN CIRCUIT

1. Disconnect TCM connector and harness connector F41.
2. Check continuity between TCM harness connector F46 terminals 5 (G/R), 6 (GY/R) and harness connector F41 terminals 21 (G/R), 8 (GY/R).

5 (G/R) – 21 (G/R) : Continuity should exist.
6 (GY/R) – 8 (GY/R) : Continuity should exist.

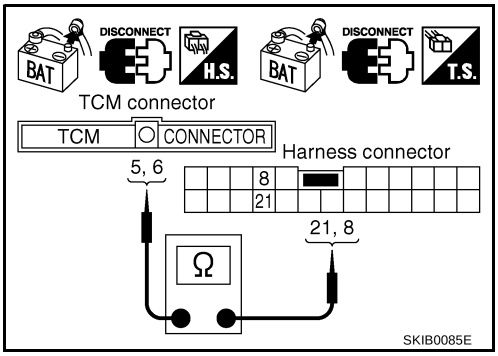

SKIB0085E

OK or NG

OK >> GO TO 3.
NG >> Repair harness.

3. CHECK HARNESS FOR OPEN CIRCUIT

1. Disconnect harness connector M75.
2. Check continuity between harness connector M61 terminals 21 (L/R), 8 (B/W) and harness connector M75 terminals 13 (L/R), 4 (B/W).

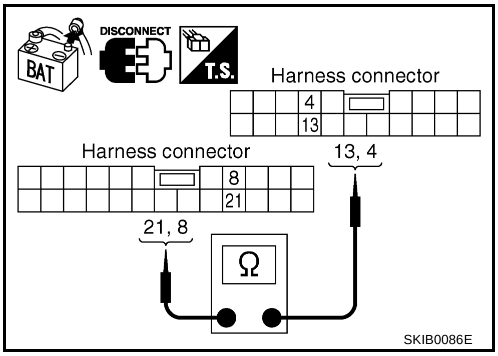

21 (L/R) – 13 (L/R) : Continuity should exist.

8 (B/W) – 4 (B/W) : Continuity should exist.

OK or NG

OK >> GO TO 4.

NG >> Repair harness.

4. CHECK HARNESS FOR OPEN CIRCUIT

1. Disconnect ABS actuator and electric unit (control unit) connector.
2. Check continuity between harness connector E116 terminals 13 (W), 4 (R) and ABS actuator and electric unit (control unit) harness connector E69 terminals 20 (W), 23 (R).

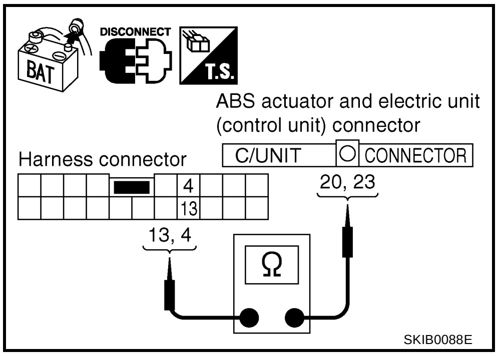

13 (W) – 20 (W) : Continuity should exist.

4 (R) – 23 (R) : Continuity should exist.

OK or NG

OK >> Connect all the connectors and diagnose again. Refer to LAN-4, "TROUBLE DIAGNOSES WORK FLOW" .

NG >> Repair harness.

Between ABS Actuator and Electric Unit (Control Unit) and AWD Control Unit Circuit Inspection

AKS00BKS

1. CHECK CONNECTOR

1. Turn ignition switch OFF.
2. Disconnect battery cable at negative terminal.
3. Check following terminals and connectors for damage, bend and loose connection (connector side and harness side).
   - Harness connector E116
   - Harness connector M75

OK or NG

OK >> GO TO 2.

NG >> Repair terminal or connector.

2. CHECK HARNESS FOR OPEN CIRCUIT

1. Disconnect ABS actuator and electric unit (control unit) connector and harness connector E116.
2. Check continuity between ABS actuator and electric unit (control unit) harness connector E69 terminals 20 (W), 23 (R) and harness connector E116 terminals 14 (W), 5 (R).

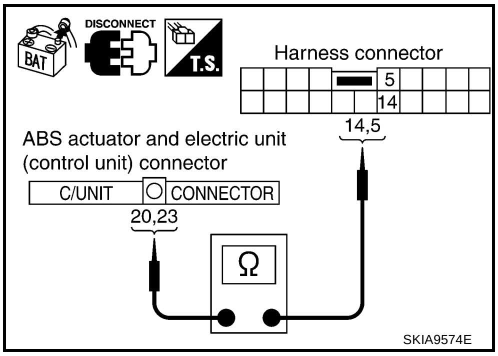

20 (W) – 14 (W) : **Continuity should exist.**

23 (R) – 5 (R) : **Continuity should exist.**

OK or NG

OK >> GO TO 3.

NG >> Repair harness.

3. CHECK HARNESS FOR OPEN CIRCUIT

1. Disconnect AWD control unit connector.
2. Check continuity between harness connector M75 terminals 14 (W), 5 (R) and AWD control unit harness connector M107 terminals 8 (W), 16 (R).

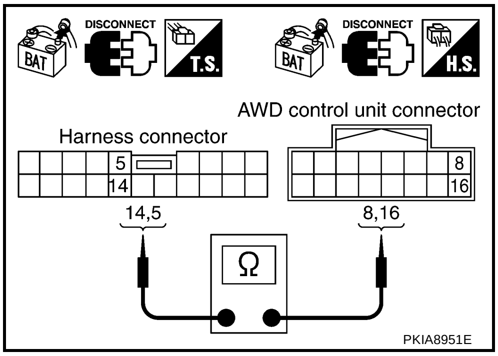

14 (W) – 8 (W) : **Continuity should exist.**

5 (R) – 16 (R) : **Continuity should exist.**

OK or NG

OK >> Connect all the connectors and diagnose again. Refer to LAN-4, "TROUBLE DIAGNOSES WORK FLOW" .

NG >> Repair harness.

ECM Circuit Inspection

AKS00BKT

1. CHECK CONNECTOR

1. Turn ignition switch OFF.
2. Disconnect battery cable at negative terminal.
3. Check following terminals and connectors for damage, bend and loose connection (control module side and harness side).

- ECM connector
- Harness connector M61
- Harness connector F41

OK or NG

OK >> GO TO 2.

NG >> Repair terminal or connector.

2. CHECK HARNESS FOR OPEN CIRCUIT

1. Disconnect ECM connector.
2. Check resistance between ECM harness connector M118 terminals 94 (G/R) and 86 (GY/R).

94 (G/R) – 86 (GY/R) : Approx. 108 – 132Ω

OK or NG

OK >> Replace ECM.
NG >> Repair harness between ECM and TCM.

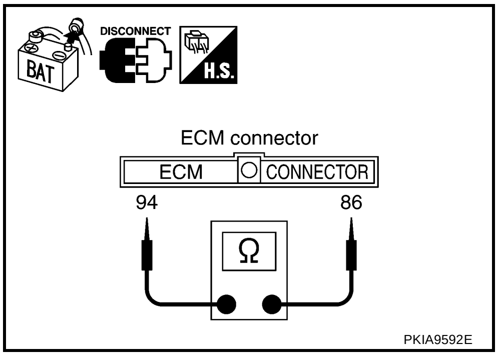

PKIA9592E

TCM Circuit Inspection

AKS00BKU

1. CHECK CONNECTOR

1. Turn ignition switch OFF.
2. Disconnect battery cable at negative terminal.
3. Check terminals and connector of TCM for damage, bend and loose connection (control module side and harness side).

OK or NG

OK >> GO TO 2.
NG >> Repair terminal or connector.

2. CHECK HARNESS FOR OPEN CIRCUIT

1. Disconnect TCM connector.
2. Check resistance between TCM harness connector F46 terminals 5 (G/R) and 6 (GY/R).

5 (G/R) – 6 (GY/R) : Approx. 54 – 66Ω

OK or NG

OK >> Replace TCM.
NG >> Repair harness between TCM and harness connector F41.

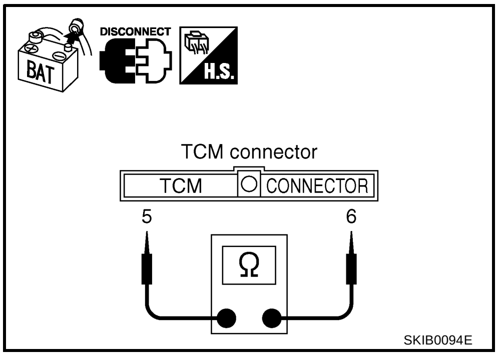

SKIB0094E

ABS Actuator and Electric Unit (Control Unit) Circuit Inspection

AKS00BKV

1. CHECK CONNECTOR

1. Turn ignition switch OFF.
2. Disconnect battery cable at negative terminal.
3. Check terminals and connector of ABS actuator and electric unit (control unit) for damage, bend and loose connection (control unit side and harness side).

OK or NG

OK >> GO TO 2.
NG >> Repair terminal or connector.

2. CHECK HARNESS FOR OPEN CIRCUIT

1. Disconnect ABS actuator and electric unit (control unit) connector.
2. Check resistance between ABS actuator and electric unit (control unit) harness connector E69 terminals 20 (W) and 23 (R).

20 (W) – 23 (R) : Approx. 54 – 66Ω

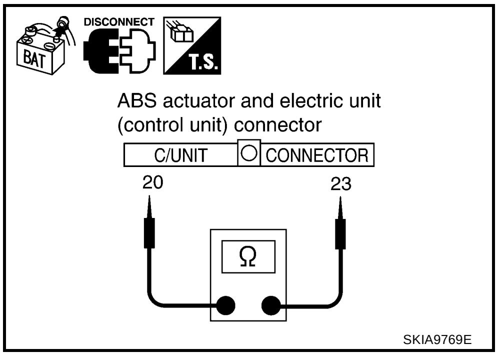

OK or NG

OK >> Replace ABS actuator and electric unit (control unit).
NG >> Repair harness between ABS actuator and electric unit (control unit) and harness connector E116.

AWD Control Unit Circuit Inspection

AKS00BKW

1. CHECK CONNECTOR

1. Turn ignition switch OFF.
2. Disconnect battery cable at negative terminal.
3. Check terminals and connector of AWD control unit for damage, bend and loose connection (control unit side and harness side).

OK or NG

OK >> GO TO 2.
NG >> Repair terminal or connector.

2. CHECK HARNESS FOR OPEN CIRCUIT

1. Disconnect AWD control unit connector.
2. Check resistance between AWD control unit harness connector M107 terminals 8 (W) and 16 (R).

8 (W) – 16 (R) : Approx. 54 – 66Ω

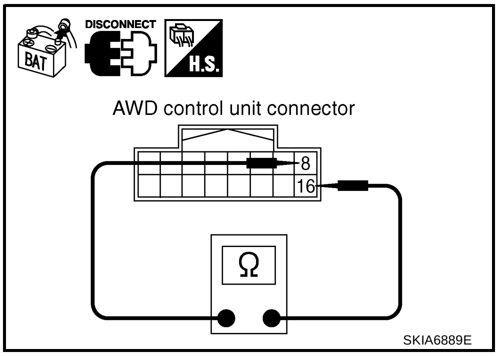

OK or NG

OK >> Replace AWD control unit.
NG >> Repair harness between AWD control unit and combination meter.

Combination Meter Circuit Inspection

AKS00BKX

1. CHECK CONNECTOR

1. Turn ignition switch OFF.
2. Disconnect battery cable at negative terminal.
3. Check terminals and connector of combination meter for damage, bend and loose connection (meter side and harness side).

OK or NG

OK >> GO TO 2.
NG >> Repair terminal or connector.

2. CHECK HARNESS FOR OPEN CIRCUIT

1. Disconnect combination meter connector.
2. Check resistance between combination meter harness connector M44 terminals 22 (W) and 23 (R).

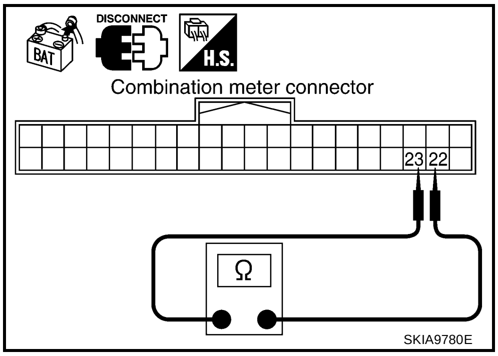

22 (W) – 23 (R) : Approx. 108 – 132Ω

OK or NG

OK >> Replace combination meter.
NG >> Repair harness between combination meter and AWD control unit.

CAN Communication Circuit Inspection

AKS00BKY

1. CHECK CONNECTOR

1. Turn ignition switch OFF.
2. Disconnect battery cable at negative terminal.
3. Check following terminals and connectors for damage, bend and loose connection (control module side, control unit side, meter side, connector side and harness side).

- ECM
- TCM
- ABS actuator and electric unit (control unit)
- AWD control unit
- Combination meter
- Between ECM and combination meter

OK or NG

OK >> GO TO 2.
NG >> Repair terminal or connector.

2. CHECK HARNESS FOR SHORT CIRCUIT

1. Disconnect ECM connector and harness connector M61.
2. Check continuity between ECM harness connector M118 terminals 94 (G/R) and 86 (GY/R).

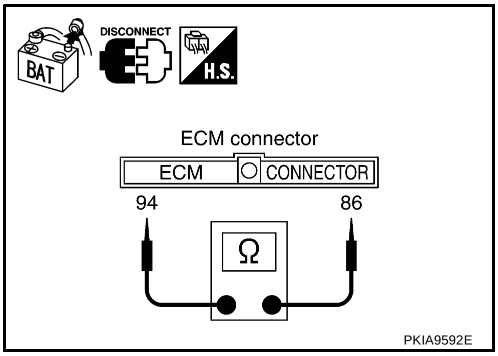

94 (G/R) – 86 (GY/R) : Continuity should not exist.

OK or NG

OK >> GO TO 3.
NG >> Repair harness between ECM and harness connector M61.

3. CHECK HARNESS FOR SHORT CIRCUIT

Check continuity between ECM harness connector M118 terminals 94 (G/R), 86 (GY/R) and ground.

94 (G/R) – Ground : Continuity should not exist.

86 (GY/R) – Ground : Continuity should not exist.

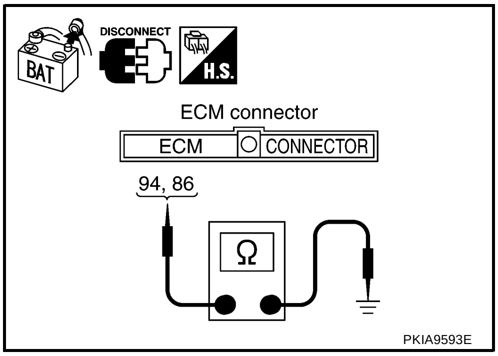

OK or NG

OK >> GO TO 4.

NG >> Repair harness between ECM and harness connector M61.

4. CHECK HARNESS FOR SHORT CIRCUIT

1. Disconnect TCM connector.
2. Check continuity between TCM harness connector F46 terminals 5 (G/R) and 6 (GY/R).

5 (G/R) – 6 (GY/R) : Continuity should not exist.

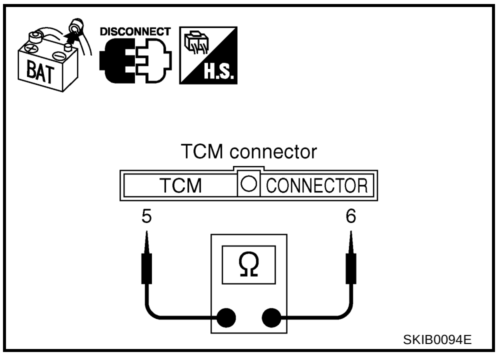

OK or NG

OK >> GO TO 5.

NG >> Repair harness between TCM and harness connector F41.

5. CHECK HARNESS FOR SHORT CIRCUIT

1. Check continuity between TCM harness connector F46 terminals 5 (G/R), 6 (GY/R) and ground.

5 (G/R) – Ground : Continuity should not exist.

6 (GY/R) – Ground : Continuity should not exist.

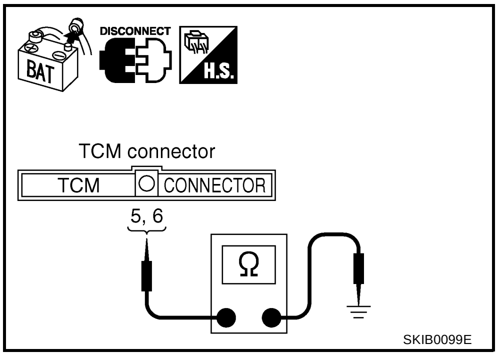

OK or NG

OK >> GO TO 6.

NG >> Repair harness between TCM and harness connector F41.

6. CHECK HARNESS FOR SHORT CIRCUIT

1. Disconnect harness connector M75.
2. Check continuity between harness connector M61 terminals 21 (L/R) and 8 (B/W).

21 (L/R) – 8 (B/W) : Continuity should not exist.

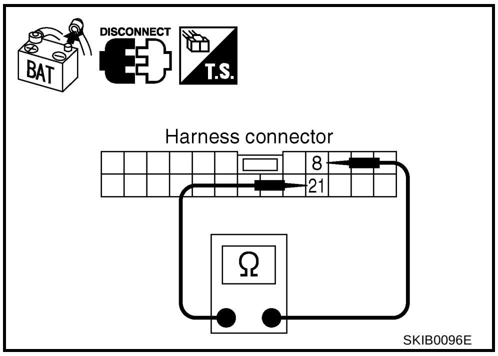

OK or NG

OK >> GO TO 7.

NG >> Repair harness between harness connector M61 and harness connector M75.

7. CHECK HARNESS FOR SHORT CIRCUIT

1. Check continuity between harness connector M61 terminals 21 (L/R), 8 (B/W) and ground.

21 (L/R) – Ground : Continuity should not exist.
8 (B/W) – Ground : Continuity should not exist.

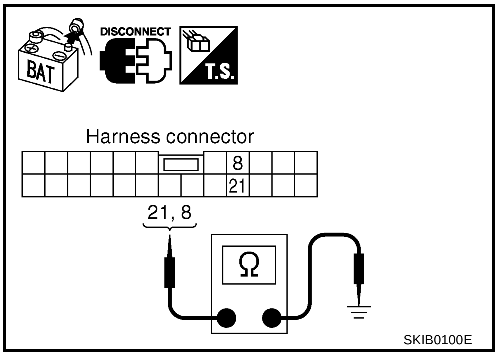

OK or NG

OK >> GO TO 8.
NG >> Repair harness between harness connector M61 and harness connector M75.

8. CHECK HARNESS FOR SHORT CIRCUIT

1. Disconnect ABS actuator and electric unit (control unit) connector.
2. Check continuity between ABS actuator and electric unit (control unit) harness connector E69 terminals 20 (W) and 23 (R).

20 (W) – 23 (R) : Continuity should not exist.

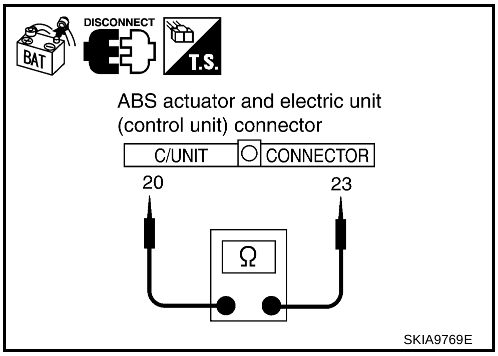

OK or NG

OK >> GO TO 9.
NG >> Repair harness between ABS actuator and electric unit (control unit) and harness connector E116.

9. CHECK HARNESS FOR SHORT CIRCUIT

Check continuity between ABS actuator and electric unit (control unit) harness connector E69 terminals 20 (W), 23 (R) and ground.

20 (W) – Ground : Continuity should not exist.
23 (R) – Ground : Continuity should not exist.

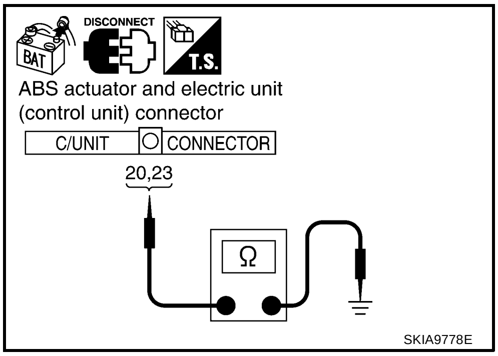

OK or NG

OK >> GO TO 10.
NG >> Repair harness between ABS actuator and electric unit (control unit) and harness connector E116.

10. CHECK HARNESS FOR SHORT CIRCUIT

1. Disconnect AWD control unit connector and combination meter connector.
2. Check continuity between combination meter harness connector M44 terminals 22 (W) and 23 (R).

22 (W) – 23 (R) : Continuity should not exist.

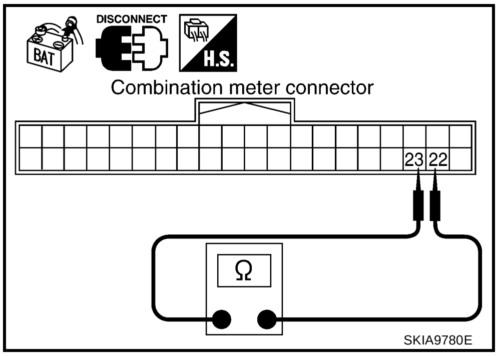

OK or NG

OK >> GO TO 11.
NG >> Check the following harness. If any harness is damaged, repair the harness.
- Harness between combination meter and AWD control unit
- Harness between combination meter and harness connector M75

11. CHECK HARNESS FOR SHORT CIRCUIT

Check continuity between combination meter harness connector M44 terminals 22 (W), 23 (R) and ground.

22 (W) – Ground : Continuity should not exist.

23 (R) – Ground : Continuity should not exist.

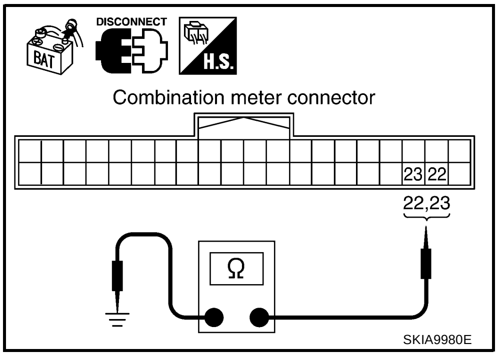

SKIA9980E

OK or NO

OK >> GO TO 12.

NG >> Check the following harness. If any harness is damaged, repair the harness.

- Harness between combination meter and AWD control unit
- Harness between combination meter and harness connector M75

12. CHECK ECM AND COMBINATION METER INTERNAL CIRCUIT

1. Remove ECM and combination meter from vehicle.
2. Check resistance between ECM terminals 94 and 86.
3. Check resistance between combination meter terminals 22 and 23.

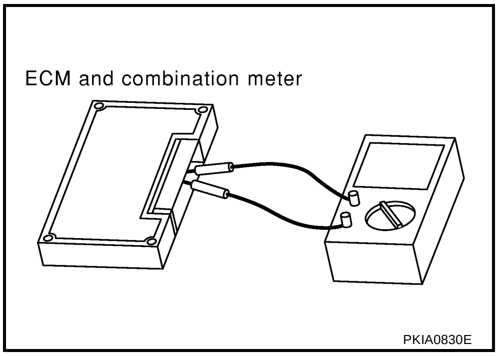

PKIA0830E

Unit	Terminal	Resistance (Ω) (Approx.)
ECM	94 – 86	108 – 132
Combination meter	22 – 23	

OK or NG

OK >> GO TO 13.

NG >> Replace ECM and/or combination meter.

13. CHECK SYMPTOM

1. Fill in described symptoms on the column “Symptom” in the check sheet.
2. Connect all connectors, and then make sure that the symptom is reproduced.

OK or NG

OK >> GO TO 14.

NG >> Refer to LAN-11, "Example of Filling in Check Sheet When Initial Conditions Are Not Reproduced" .

14. CHECK UNIT REPRODUCIBILITY

Performs the following procedure for each unit, and then perform reproducibility test.

1. Turn ignition switch OFF.
2. Disconnect battery cable at negative terminal.
3. Disconnect the unit connector.
4. Connect battery cable at negative terminal.
5. Make sure that the symptom filled in the “Symptom” of the check sheet is reproduced. (Do not confuse it with the symptom related to removed unit.)
6. Make sure that the same symptom is reproduced.

- TCM
- ABS actuator and electric unit (control unit)
- AWD control unit
- ECM
- Combination meter

Check results

Reproduce>>Install removed unit, and then check the other units.
Not reproduced>>Replace removed unit.

CAN SYSTEM (TYPE 4)

PFP:23710

Component Parts and Harness Connector Location

AKS00BL1

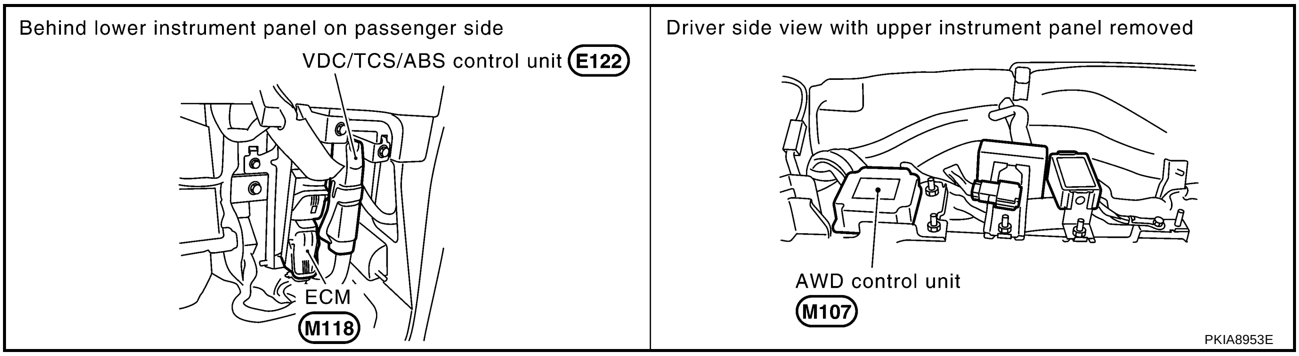

Wiring Diagram — CAN —

AKS00BL2

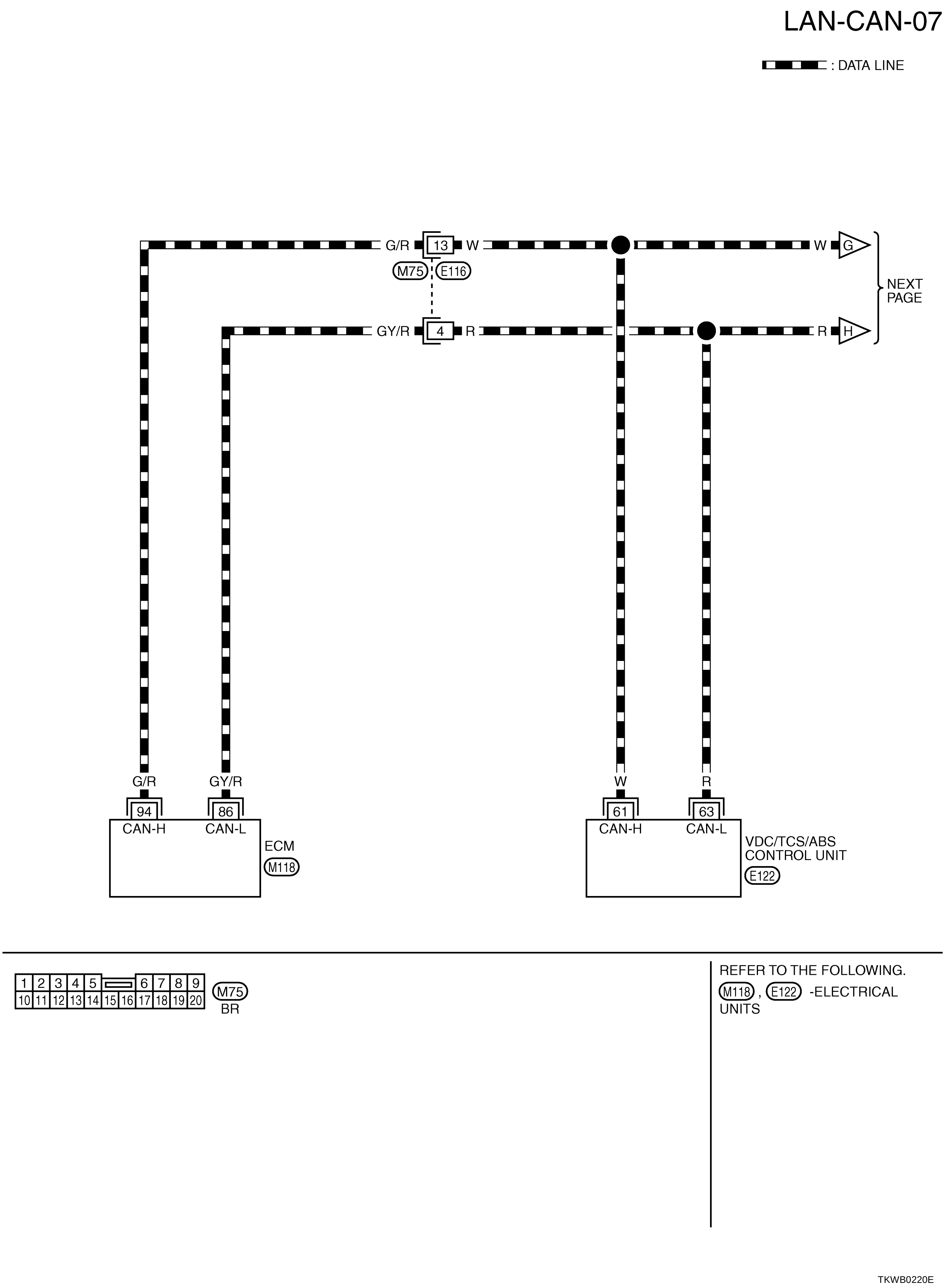

LAN-CAN-08

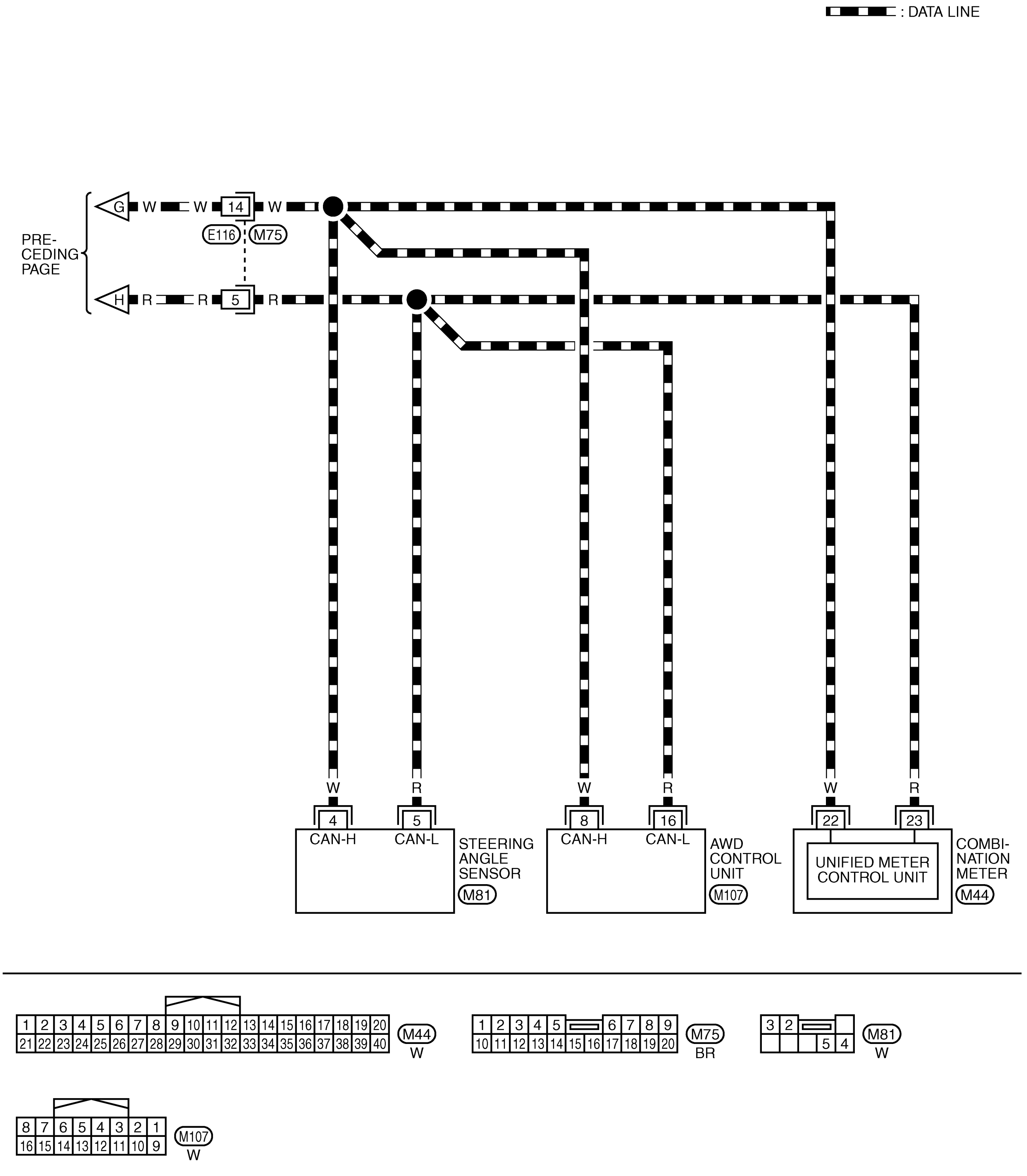

TKWB0221E

Check Sheet

AKS00BL3

NOTE:

If a check mark is put on “NG” on “INITIAL DIAG (Initial diagnosis)”, replace the control unit.

Check sheet table

SELECT SYSTEM screen	CAN DIAG SUPPORT MNTR							SELF-DIAG RESULTS	
	Initial diagnosis	Transmit diagnosis	Receive diagnosis						
			ECM	VDC/TCS /ABS	STRG	AWD /4WD	METER /M&A		
ENGINE	NG	UNKWN	–	UNKWN	–	–	UNKWN	CAN COMM CIRCUIT (U1000)	CAN COMM CIRCUIT (U1001)
ABS	NG	UNKWN	UNKWN	–	UNKWN	UNKWN	–	CAN COMM CIRCUIT (U1000)	–
ALL MODE AWD/4WD	NG	UNKWN	UNKWN	UNKWN	–	–	–	CAN COMM CIRCUIT (U1000)	–

Symptoms :

Attach copy of ENGINE SELF-DIAG RESULTS

Attach copy of ABS SELF-DIAG RESULTS

Attach copy of ALL MODE AWD/4WD SELF-DIAG RESULTS

Attach copy of ENGINE CAN DIAG SUPPORT MNTR

Attach copy of ABS CAN DIAG SUPPORT MNTR

Attach copy of ALL MODE AWD/4WD CAN DIAG SUPPORT MNTR

PKIA8777E

CHECK SHEET RESULTS (EXAMPLE)

NOTE:

If a check mark is put on “NG” on “INITIAL DIAG (Initial diagnosis)”, replace the control unit.

Case 1

Check harness between VDC/TCS/ABS control unit and AWD control unit. Refer to LAN-86, "Between VDC/TCS/ABS Control Unit and AWD Control Unit Circuit Inspection" .

SELECT SYSTEM screen	CAN DIAG SUPPORT MNTR							SELF-DIAG RESULTS	
	Initial diagnosis	Transmit diagnosis	Receive diagnosis						
			ECM	VDC/TCS /ABS	STRG	AWD /4WD	METER /M&A		
ENGINE	NG	UNKWN	–	UNKWN	–	–	UNKWN ✓	CAN COMM CIRCUIT (U1000)	CAN COMM CIRCUIT (U1001) ✓
ABS	NG	UNKWN	UNKWN	–	UNKWN ✓	UNKWN ✓	–	CAN COMM CIRCUIT (U1000) ✓	–
ALL MODE AWD/4WD	NG	UNKWN	UNKWN ✓	UNKWN ✓	–	–	–	CAN COMM CIRCUIT (U1000) ✓	–

PKIA8778E

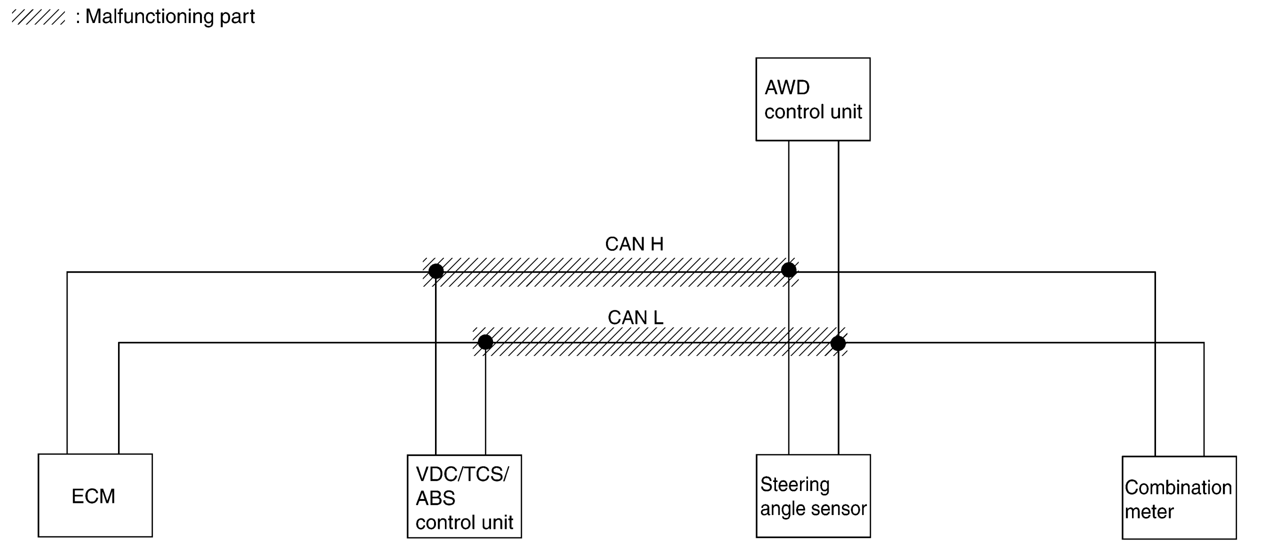

PKIA8852E

Case 2

Check ECM circuit. Refer to LAN-87, "ECM Circuit Inspection" .

SELECT SYSTEM screen	CAN DIAG SUPPORT MNTR							SELF-DIAG RESULTS	
	Initial diagnosis	Transmit diagnosis	Receive diagnosis						
			ECM	VDC/TCS /ABS	STRG	AWD /4WD	METER /M&A		
ENGINE	NG	UNKWN ✓	—	UNKWN ✓	—	—	UNKWN ✓	CAN COMM CIRCUIT (U1000) ✓	CAN COMM CIRCUIT (U1001) ✓
ABS	NG	UNKWN	UNKWN ✓	—	UNKWN	UNKWN	—	CAN COMM CIRCUIT (U1000) ✓	—
ALL MODE AWD/4WD	NG	UNKWN	UNKWN ✓	UNKWN	—	—	—	CAN COMM CIRCUIT (U1000) ✓	—

PKIA8779E

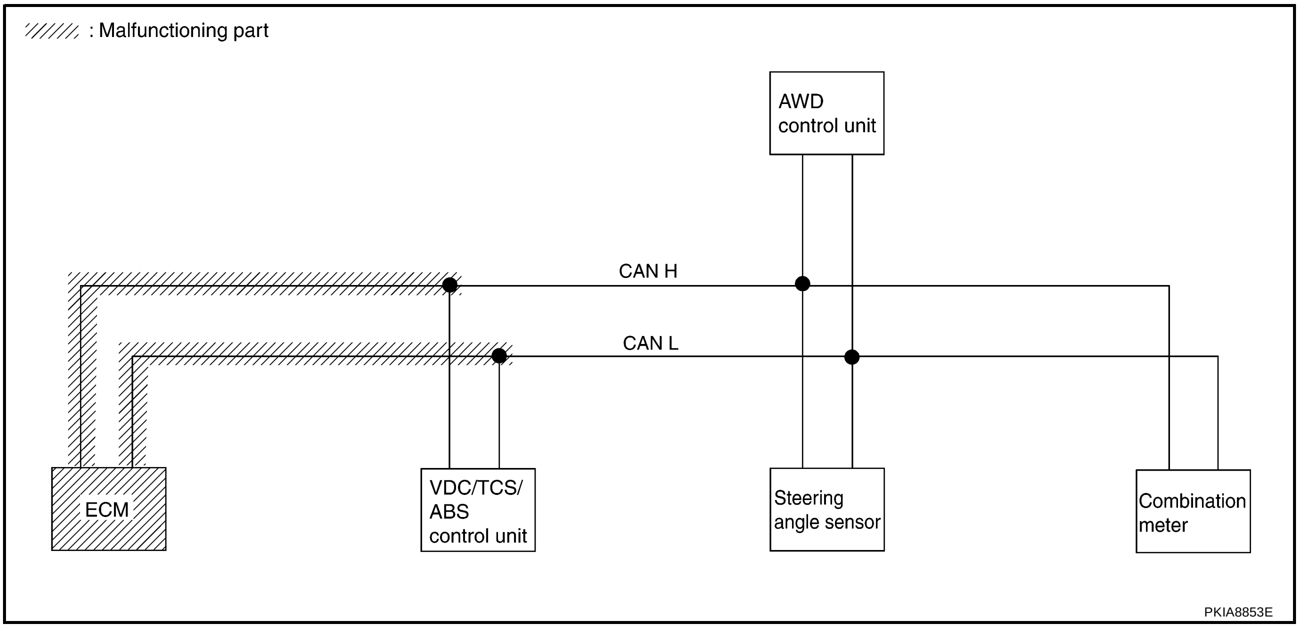

PKIA8853E

Case 3

Check VDC/TCS/ABS control unit circuit. Refer to LAN-87, "VDC/TCS/ABS Control Unit Circuit Inspection" .

SELECT SYSTEM screen	CAN DIAG SUPPORT MNTR							SELF-DIAG RESULTS	
	Initial diagnosis	Transmit diagnosis	Receive diagnosis						
			ECM	VDC/TCS /ABS	STRG	AWD /4WD	METER /M&A		
ENGINE	NG	UNKWN	–	UNKWN ✓	–	–	UNKWN	CAN COMM CIRCUIT (U1000)	CAN COMM CIRCUIT (U1001) ✓
ABS	NG ✓	UNKWN ✓	UNKWN ✓	–	UNKWN ✓	UNKWN ✓	–	CAN COMM CIRCUIT (U1000) ✓	–
ALL MODE AWD/4WD	NG	UNKWN	UNKWN	UNKWN ✓	–	–	–	CAN COMM CIRCUIT (U1000) ✓	–

PKIA8780E

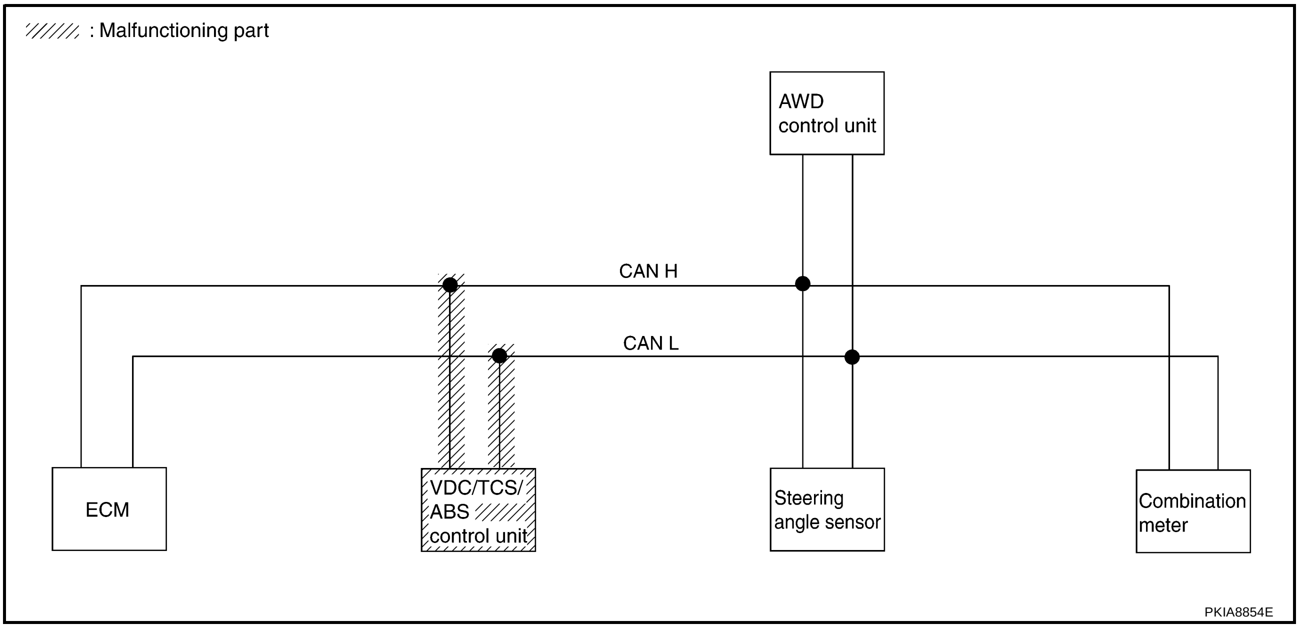

Case 4

Check steering angle sensor circuit. Refer to LAN-88, "Steering Angle Sensor Circuit Inspection" .

SELECT SYSTEM screen	CAN DIAG SUPPORT MNTR							SELF-DIAG RESULTS	
	Initial diagnosis	Transmit diagnosis	Receive diagnosis						
			ECM	VDC/TCS /ABS	STRG	AWD /4WD	METER /M&A		
ENGINE	NG	UNKWN	–	UNKWN	–	–	UNKWN	CAN COMM CIRCUIT (U1000)	CAN COMM CIRCUIT (U1001)
ABS	NG	UNKWN	UNKWN	–	UNKWN ✓	UNKWN	–	CAN COMM CIRCUIT (U1000) ✓	–
ALL MODE AWD/4WD	NG	UNKWN	UNKWN	UNKWN	–	–	–	CAN COMM CIRCUIT (U1000)	–

PKIA8781E

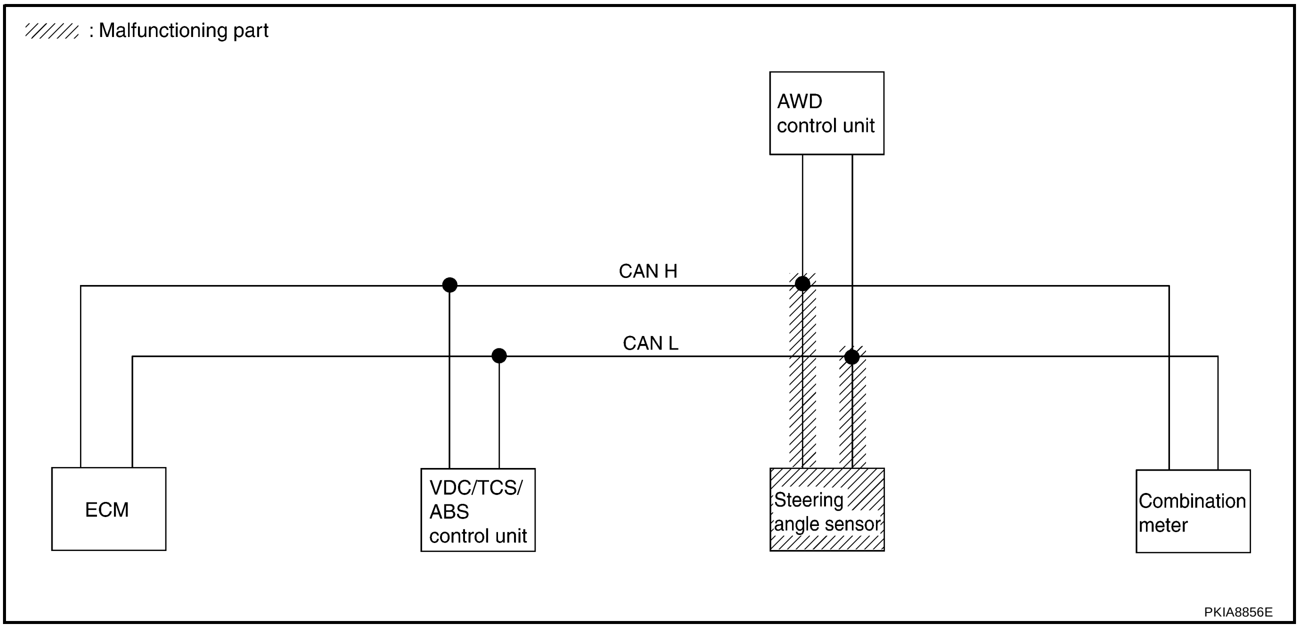

A
B
C
D
E
F
G
H
I
J
LAN
L
M

Case 5

Check AWD control unit circuit. Refer to LAN-88, "AWD Control Unit Circuit Inspection" .

SELECT SYSTEM screen	CAN DIAG SUPPORT MNTR							SELF-DIAG RESULTS	
	Initial diagnosis	Transmit diagnosis	Receive diagnosis						
			ECM	VDC/TCS /ABS	STRG	AWD /4WD	METER /M&A		
ENGINE	NG	UNKWN	–	UNKWN	–	–	UNKWN	CAN COMM CIRCUIT (U1000)	CAN COMM CIRCUIT (U1001)
ABS	NG	UNKWN	UNKWN	–	UNKWN	UNKWN ✓	–	CAN COMM CIRCUIT (U1000) ✓	–
ALL MODE AWD/4WD	NG	UNKWN ✓	UNKWN	UNKWN	–	–	–	CAN COMM CIRCUIT (U1000) ✓	–

PKIA8782E

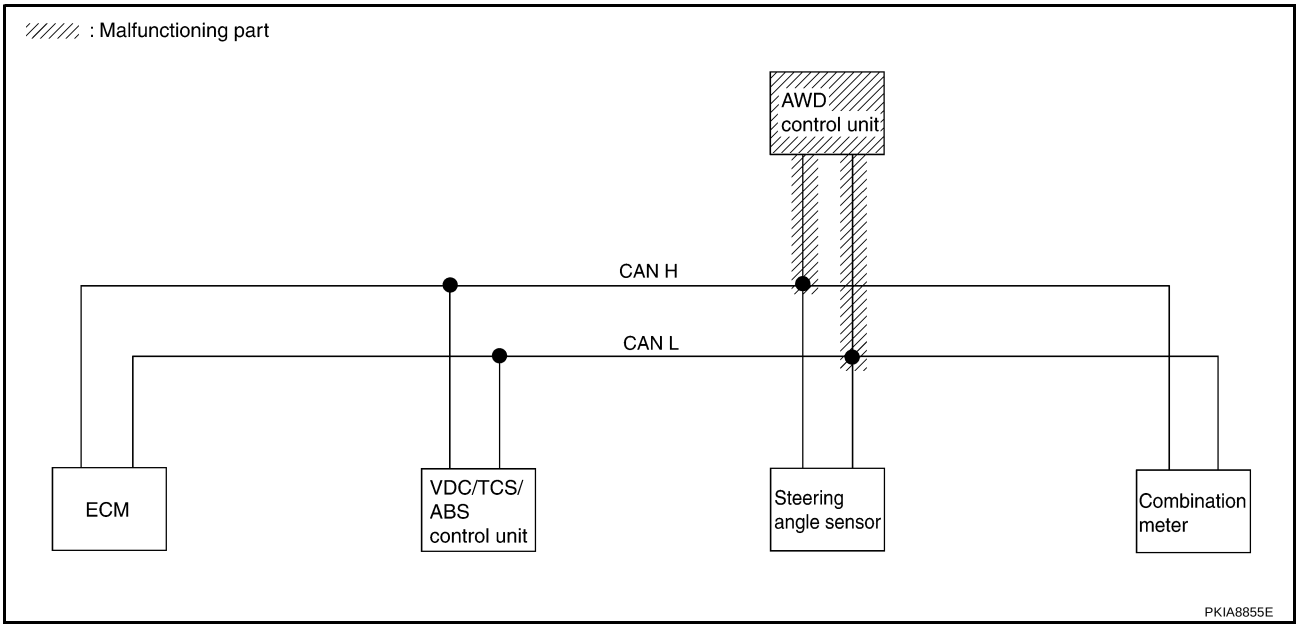

Case 6

Check combination meter circuit. Refer to LAN-89, "Combination Meter Circuit Inspection" .

SELECT SYSTEM screen	CAN DIAG SUPPORT MNTR							SELF-DIAG RESULTS	
	Initial diagnosis	Transmit diagnosis	Receive diagnosis						
			ECM	VDC/TCS /ABS	STRG	AWD /4WD	METER /M&A		
ENGINE	NG	UNKWN	–	UNKWN	–	–	UNKWN ✓	CAN COMM CIRCUIT (U1000)	CAN COMM CIRCUIT (U1001) ✓
ABS	NG	UNKWN	UNKWN	–	UNKWN	UNKWN	–	CAN COMM CIRCUIT (U1000)	–
ALL MODE AWD/4WD	NG	UNKWN	UNKWN	UNKWN	–	–	–	CAN COMM CIRCUIT (U1000)	–

PKIA8783E

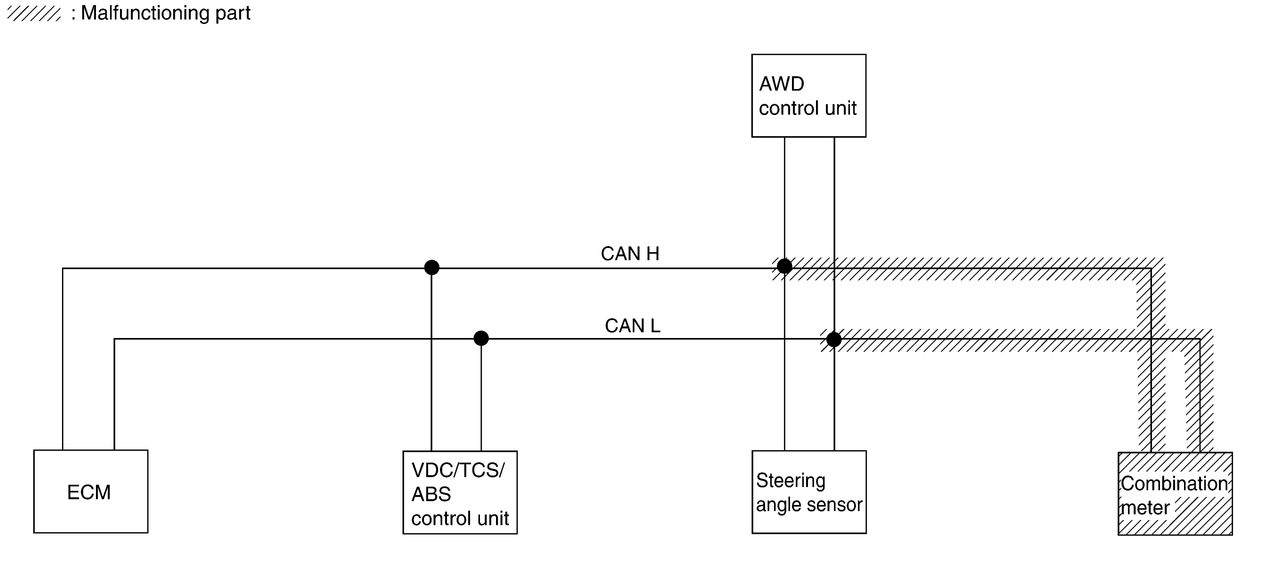

PKIA8857E

Case 7

Check CAN communication circuit. Refer to LAN-89, "CAN Communication Circuit Inspection" .

SELECT SYSTEM screen	CAN DIAG SUPPORT MNTR							SELF-DIAG RESULTS	
	Initial diagnosis	Transmit diagnosis	Receive diagnosis						
			ECM	VDC/TCS /ABS	STRG	AWD /4WD	METER /M&A		
ENGINE	NG	UNKWN ✓	–	UNKWN ✓	–	–	UNKWN ✓	CAN COMM CIRCUIT (U1000) ✓	CAN COMM CIRCUIT (U1001) ✓
ABS	NG ✓	UNKWN ✓	UNKWN ✓	–	UNKWN ✓	UNKWN ✓	–	CAN COMM CIRCUIT (U1000) ✓	–
ALL MODE AWD/4WD	NG	UNKWN ✓	UNKWN	UNKWN	–	–	–	CAN COMM CIRCUIT (U1000) ✓	–

PKIA8784E

Between VDC/TCS/ABS Control Unit and AWD Control Unit Circuit Inspection

AKS00BL4

1. CHECK CONNECTOR

1. Turn ignition switch OFF.
2. Disconnect battery cable at negative terminal.
3. Check following terminals and connector for damage, bend and loose connection (connector side and harness side).

– Harness connector E116
– Harness connector M75

OK or NG

OK >> GO TO 2.
NG >> Repair terminal or connector.

2. CHECK HARNESS FOR OPEN CIRCUIT

1. Disconnect VDC/TCS/ABS control unit connector and harness connector E116.
2. Check continuity between VDC/TCS/ABS control unit harness connector E122 terminals 61 (W), 63 (R) and harness connector E116 terminals 14 (W), 5 (R).

61 (W) – 14 (W) : Continuity should exist.
63 (R) – 5 (R) : Continuity should exist.

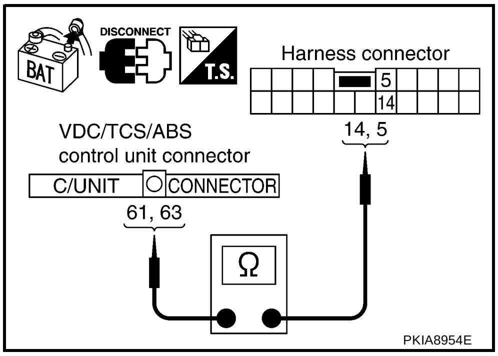

PKIA8954E

OK or NG

OK >> GO TO 3.
NG >> Repair harness.

3. CHECK HARNESS FOR OPEN CIRCUIT

1. Disconnect AWD control unit connector.
2. Check continuity between harness connector M75 terminals 14 (W), 5 (R) and AWD control unit harness connector M107 terminals 8 (W), 16 (R).

14 (W) – 8 (W) : Continuity should exist.
5 (R) – 16 (R) : Continuity should exist.

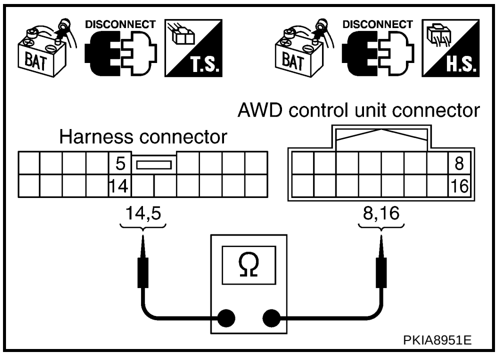

PKIA8951E

OK or NG

OK >> Connect all the connectors and diagnose again. Refer to LAN-4, "TROUBLE DIAGNOSES WORK FLOW" .
NG >> Repair harness.

ECM Circuit Inspection

AKS00BL5

1. CHECK CONNECTOR

1. Turn ignition switch OFF.
2. Disconnect battery cable at negative terminal.
3. Check following terminals and connectors for damage, bend and loose connection (control module side and harness side).

- ECM connector
- Harness connector M75
- Harness connector E116

OK or NG

OK >> GO TO 2.
NG >> Repair terminal or connector.

2. CHECK HARNESS FOR OPEN CIRCUIT

1. Disconnect ECM connector.
2. Check resistance between ECM harness connector M118 terminals 94 (G/R) and 86 (GY/R).

94 (G/R) – 86 (GY/R) : Approx. 108 – 132Ω

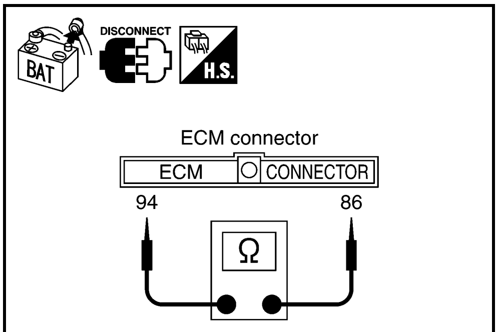

PKIA9592E

OK or NG

OK >> Replace ECM.
NG >> Repair harness between ECM and VDC/TCS/ABS control unit.

VDC/TCS/ABS Control Unit Circuit Inspection

AKS00BL6

1. CHECK CONNECTOR

1. Turn ignition switch OFF.
2. Disconnect battery cable at negative terminal.
3. Check terminals and connector of VDC/TCS/ABS control unit for damage, bend and loose connection (control unit side and harness side).

OK or NG

OK >> GO TO 2.
NG >> Repair terminal or connector.

2. CHECK HARNESS FOR OPEN CIRCUIT

1. Disconnect VDC/TCS/ABS control unit connector.
2. Check resistance between VDC/TCS/ABS control unit harness connector E122 terminals 61 (W) and 63 (R).

61 (W) – 63 (R) : Approx. 54 – 66Ω

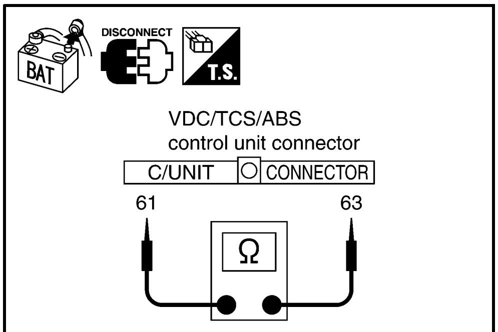

PKIA9594E

OK or NG

OK >> Replace VDC/TCS/ABS control unit.
NG >> Repair harness between VDC/TCS/ABS control unit and harness connector E116.

Steering Angle Sensor Circuit Inspection

AKS00BL7

1. CHECK CONNECTOR

1. Turn ignition switch OFF.
2. Disconnect battery cable at negative terminal.
3. Check terminals and connector of steering angle sensor for damage, bend and loose connection (sensor side and harness side).

OK or NG

OK >> GO TO 2.
NG >> Repair terminal or connector.

2. CHECK HARNESS FOR OPEN CIRCUIT

1. Disconnect steering angle sensor connector.
2. Check resistance between steering angle sensor harness connector M81 terminals 4 (W) and 5 (R).

4 (W) – 5 (R) : Approx. 54 – 66Ω

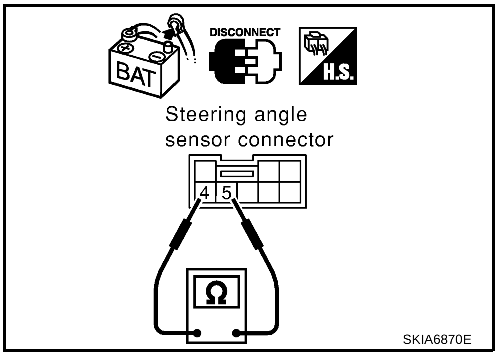

OK or NG

OK >> Replace steering angle sensor.
NG >> Repair harness between steering angle sensor and AWD control unit.

AWD Control Unit Circuit Inspection

AKS00BL8

1. CHECK CONNECTOR

1. Turn ignition switch OFF.
2. Disconnect battery cable at negative terminal.
3. Check terminals and connector of AWD control unit for damage, bend and loose connection (control unit side and harness side).

OK or NG

OK >> GO TO 2.
NG >> Repair terminal or connector.

2. CHECK HARNESS FOR OPEN CIRCUIT

1. Disconnect AWD control unit connector.
2. Check resistance between AWD control unit harness connector M107 terminals 8 (W) and 16 (R).

8 (W) – 16 (R) : Approx. 54 – 66Ω

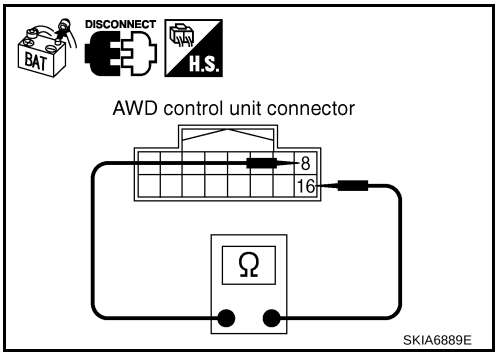

OK or NG

OK >> Replace AWD control unit.
NG >> Repair harness between AWD control unit and steering angle sensor.

Combination Meter Circuit Inspection
AKS00BL9

1. CHECK CONNECTOR

1. Turn ignition switch OFF.
2. Disconnect battery cable at negative terminal.
3. Check terminals and connector of combination meter for damage, bend and loose connection (meter side and harness side).

OK or NG

OK >> GO TO 2.
NG >> Repair terminal or connector.

2. CHECK HARNESS FOR OPEN CIRCUIT

1. Disconnect combination meter connector.
2. Check resistance between combination meter harness connector M44 terminals 22 (W) and 23 (R).

22 (W) – 23 (R) : Approx. 108 – 132Ω

OK or NG

OK >> Replace combination meter.
NG >> Repair harness between combination meter and AWD control unit.

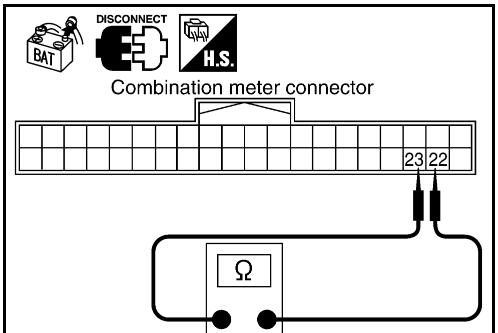

SKIA9780E

CAN Communication Circuit Inspection
AKS00BLA

1. CHECK CONNECTOR

1. Turn ignition switch OFF.
2. Disconnect battery cable at negative terminal.
3. Check following terminals and connectors for damage, bend and loose connection (control module side, control unit side, sensor side, meter side, connector side and harness side).

- ECM
- VDC/TCS/ABS control unit
- Steering angle sensor
- AWD control unit
- Combination meter
- Between ECM and combination meter

OK or NG

OK >> GO TO 2.
NG >> Repair terminal or connector.

2. CHECK HARNESS FOR SHORT CIRCUIT

1. Disconnect ECM connector and harness connector M75.
2. Check continuity between ECM harness connector M118 terminals 94 (G/R) and 86 (GY/R).

94 (G/R) – 86 (GY/R) : Continuity should not exist.

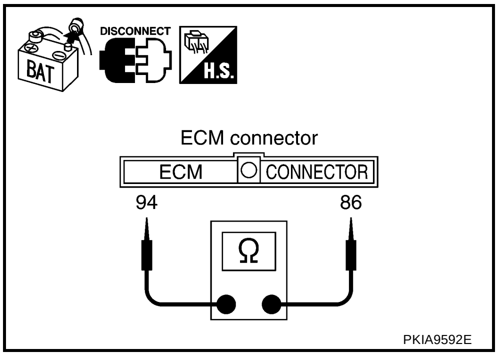

OK or NG

OK >> GO TO 3.
NG >> Repair harness between ECM and harness connector M75.

3. CHECK HARNESS FOR SHORT CIRCUIT

Check continuity between ECM harness connector M118 terminals 94 (G/R), 86 (GY/R) and ground.

94 (G/R) – Ground : Continuity should not exist.
86 (GY/R) – Ground : Continuity should not exist.

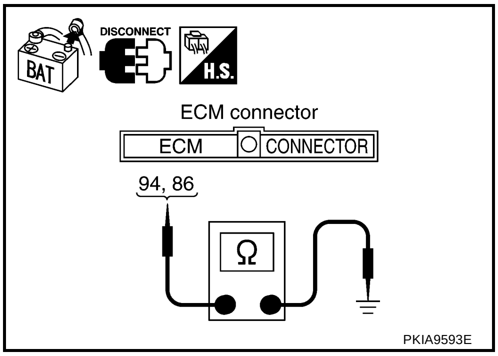

OK or NG

OK >> GO TO 4.
NG >> Repair harness between ECM and harness connector M75.

4. CHECK HARNESS FOR SHORT CIRCUIT

1. Disconnect VDC/TCS/ABS control unit connector.
2. Check continuity between VDC/TCS/ABS control unit harness connector E122 terminals 61 (W) and 63 (R).

61 (W) – 63 (R) : Continuity should not exist.

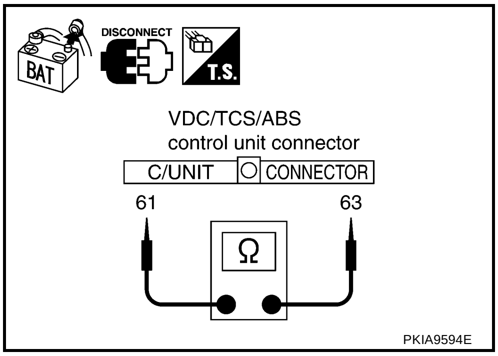

OK or NG

OK >> GO TO 5.
NG >> Repair harness between VDC/TCS/ABS control unit and harness connector E116.

5. CHECK HARNESS FOR SHORT CIRCUIT

Check continuity between VDC/TCS/ABS control unit harness connector E122 terminals 61 (W), 63 (R) and ground.

61 (W) – Ground : Continuity should not exist.
63 (R) – Ground : Continuity should not exist.

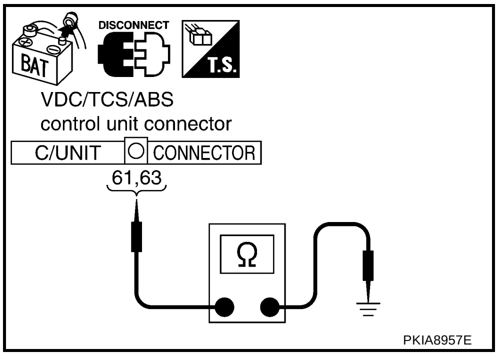

OK or NG

OK >> GO TO 6.
NG >> Repair harness between VDC/TCS/ABS control unit and harness connector E116.

6. CHECK HARNESS FOR SHORT CIRCUIT

1. Disconnect following connectors.
- Steering angle sensor connector
- AWD control unit connector
- combination meter connector
2. Check continuity between combination meter harness connector M44 terminals 22 (W) and 23 (R).

22 (W) – 23 (R) : Continuity should not exist.

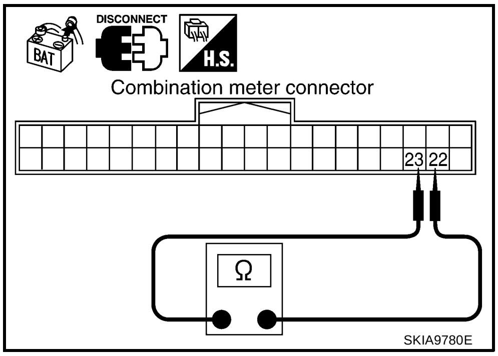

SKIA9780E

OK or NG

OK >> GO TO 7.

NG >> Check the following harness. If any harness is damaged, repair the harness.
- Harness between combination meter and steering angle sensor
- Harness between combination meter and AWD control unit
- Harness between combination meter and harness connector M75

7. CHECK HARNESS FOR SHORT CIRCUIT

Check continuity between combination meter harness connector M44 terminals 22 (W), 23 (R) and ground.

22 (W) – Ground : Continuity should not exist.

23 (R) – Ground : Continuity should not exist.

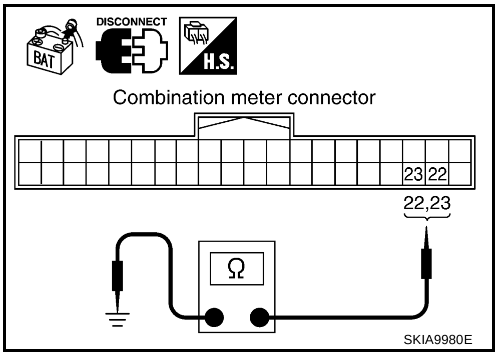

SKIA9980E

OK or NO

OK >> GO TO 8.

NG >> Check the following harness. If any harness is damaged, repair the harness.
- Harness between combination meter and steering angle sensor
- Harness between combination meter and AWD control unit
- Harness between combination meter and harness connector M75

8. CHECK ECM AND COMBINATION METER INTERNAL CIRCUIT

1. Remove ECM and combination meter from vehicle.
2. Check resistance between ECM terminals 94 and 86.
3. Check resistance between combination meter terminals 22 and 23.

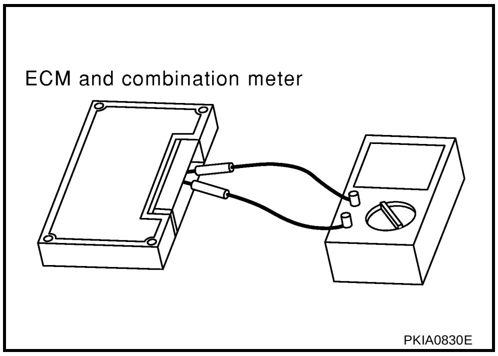

PKIA0830E

Unit	Terminal	Resistance (Ω) (Approx.)
ECM	94 – 86	108 – 132
Combination meter	22 – 23	

OK or NG

OK >> GO TO 9.

NG >> Replace ECM and/or combination meter.

9. CHECK SYMPTOM

1. Fill in described symptoms on the column “Symptom” in the check sheet.
2. Connect all connectors, and then make sure that the symptom is reproduced.

OK or NG

OK >> GO TO 10.
NG >> Refer to LAN-11, "Example of Filling in Check Sheet When Initial Conditions Are Not Reproduced"
.

10. CHECK UNIT REPRODUCIBILITY

Performs the following procedure for each unit, and then perform reproducibility test.

1. Turn ignition switch OFF.
2. Disconnect battery cable at negative terminal.
3. Disconnect the unit connector.
4. Connect battery cable at negative terminal.
5. Make sure that the symptom filled in the “Symptom” of the check sheet is reproduced. (Do not confuse it with the symptom related to removed unit.)
6. Make sure that the same symptom is reproduced.

- VDC/TCS/ABS control unit
- Steering angle sensor
- AWD control unit
- ECM
- Combination meter

Check results

Reproduce>>Install removed unit, and then check the other units.
Not reproduced>>Replace removed unit.

CAN SYSTEM (TYPE 5)

PFP:23710

Component Parts and Harness Connector Location

AKS00BLD

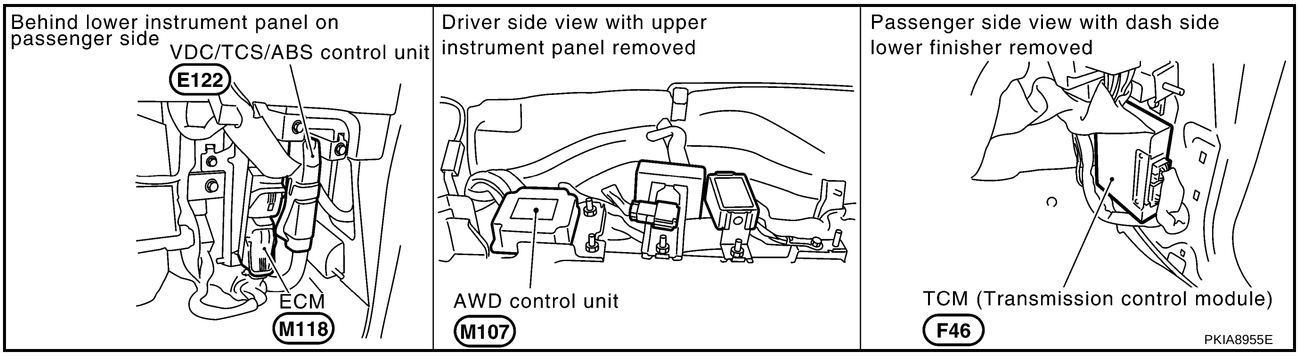

Wiring Diagram — CAN —

AKS00BLE

LAN-CAN-09

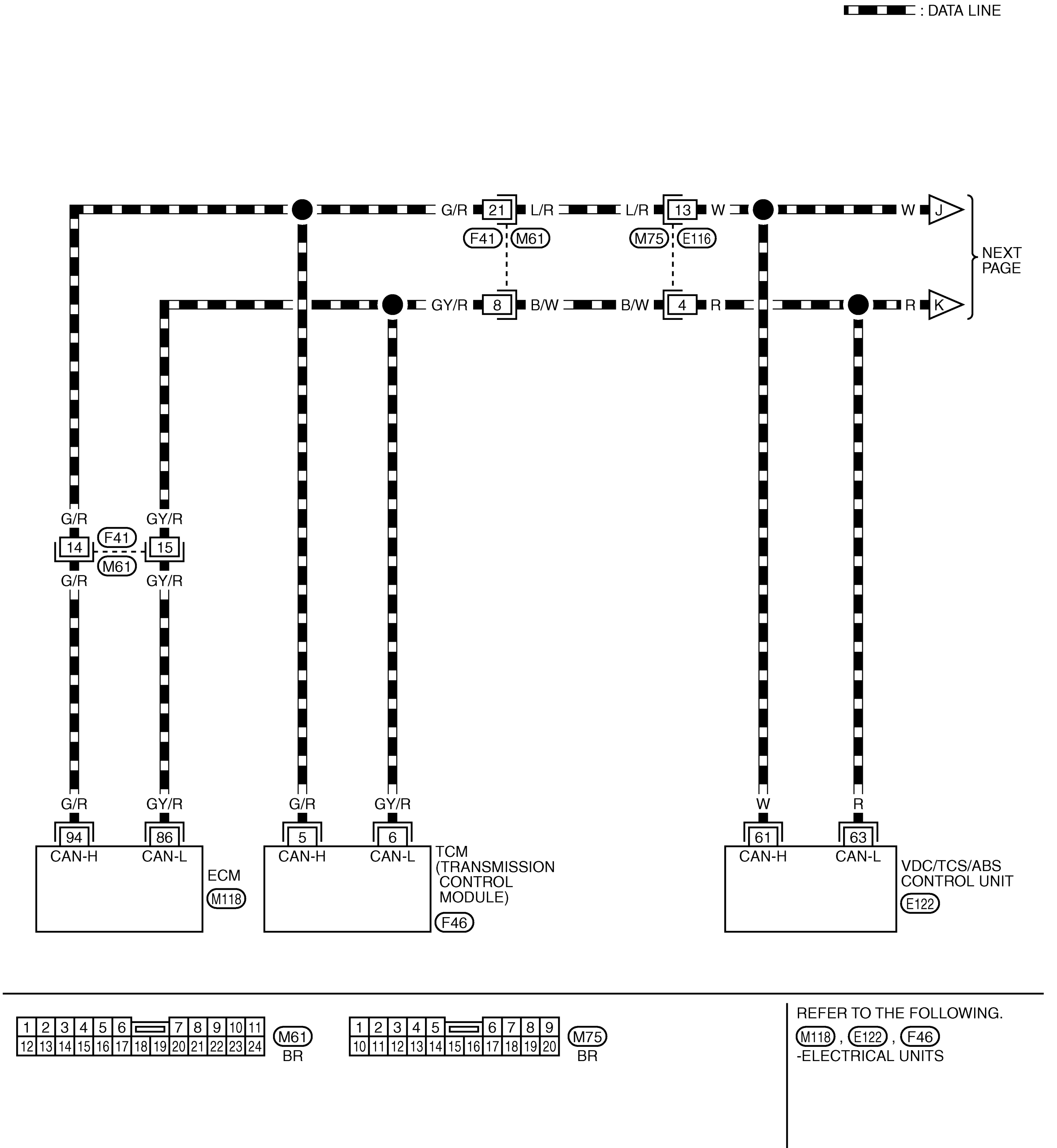

REFER TO THE FOLLOWING.
M118, E122, F46
-ELECTRICAL UNITS

TKWB0222E

LAN-CAN-10

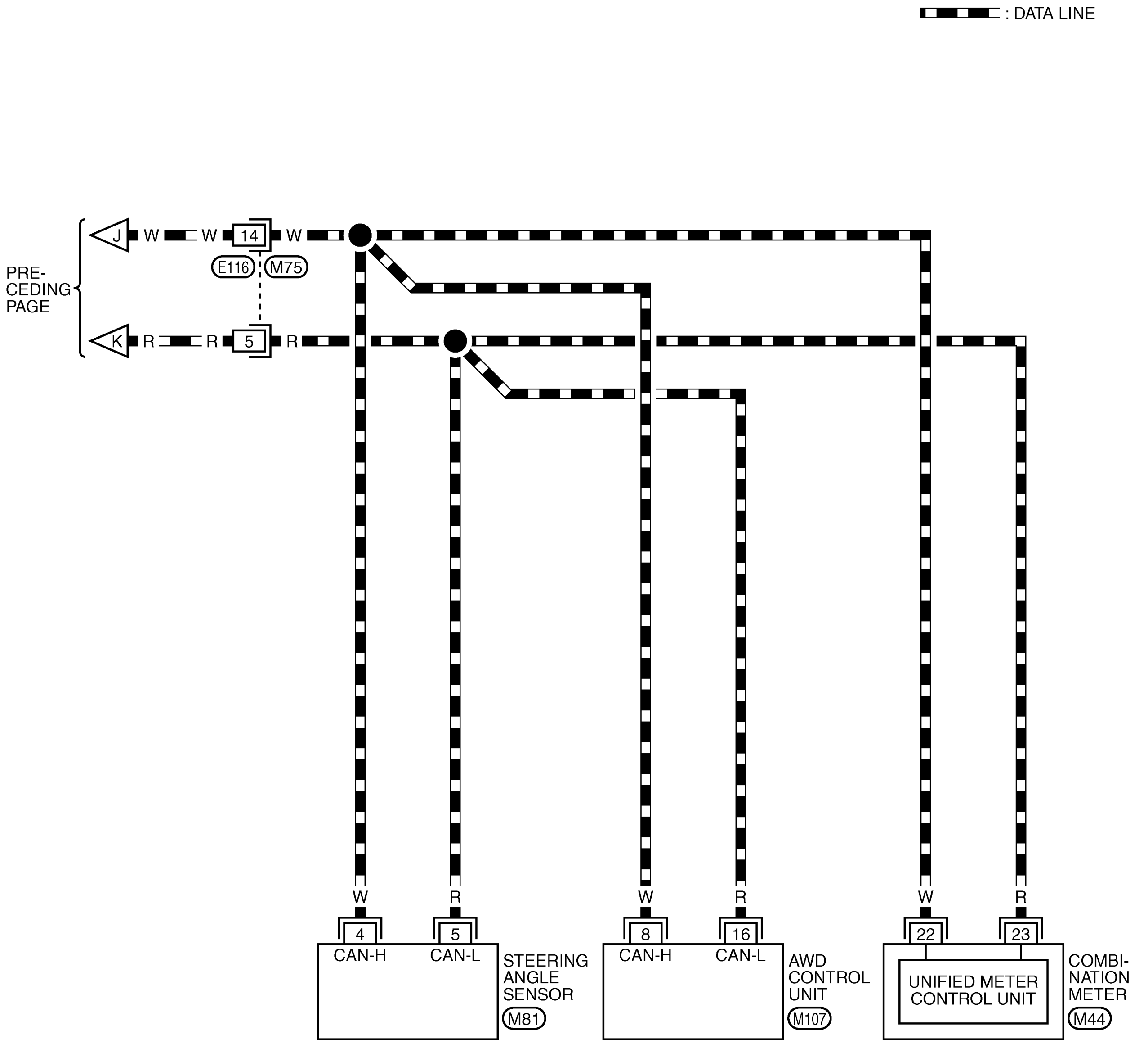

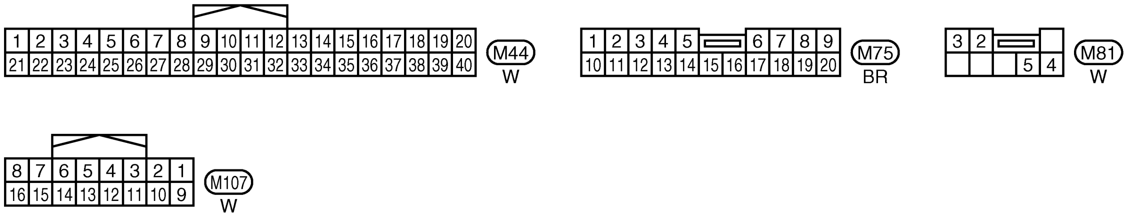

TKWB0223E

Check Sheet

AKS00BLF

NOTE:
If a check mark is put on “NG” on “INITIAL DIAG (Initial diagnosis)”, replace the control unit.

Check sheet table

SELECT SYSTEM screen	CAN DIAG SUPPORT MNTR								SELF-DIAG RESULTS	
	Initial diagnosis	Transmit diagnosis	Receive diagnosis							
			ECM	TCM	VDC/TCS /ABS	STRG	AWD /4WD	METER /M&A		
ENGINE	NG	UNKWN	–	UNKWN	UNKWN	–	–	UNKWN	CAN COMM CIRCUIT (U1000)	CAN COMM CIRCUIT (U1001)
A/T	NG	UNKWN	UNKWN	–	UNKWN	–	–	UNKWN	CAN COMM CIRCUIT (U1000)	–
ABS	NG	UNKWN	UNKWN	–	–	UNKWN	UNKWN	–	CAN COMM CIRCUIT (U1000)	–
ALL MODE AWD/4WD	NG	UNKWN	UNKWN	–	UNKWN	–	–	–	CAN COMM CIRCUIT (U1000)	–

Symptoms :

Attach copy of ENGINE SELF-DIAG RESULTS	Attach copy of A/T SELF-DIAG RESULTS	Attach copy of ABS SELF-DIAG RESULTS	Attach copy of ALL MODE AWD/4WD SELF-DIAG RESULTS
Attach copy of ENGINE CAN DIAG SUPPORT MNTR	Attach copy of A/T CAN DIAG SUPPORT MNTR	Attach copy of ABS CAN DIAG SUPPORT MNTR	Attach copy of ALL MODE AWD/4WD CAN DIAG SUPPORT MNTR

PKIA8785E

CHECK SHEET RESULTS (EXAMPLE)

NOTE:
If a check mark is put on “NG” on “INITIAL DIAG (Initial diagnosis)”, replace the control unit.

Case 1

Check harness between TCM and VDC/TCS/ABS control unit. Refer to LAN-105, "Between TCM and VDC/TCS/ABS Control Unit Circuit Inspection" .

SELECT SYSTEM screen	CAN DIAG SUPPORT MNTR								SELF-DIAG RESULTS	
	Initial diagnosis	Transmit diagnosis	Receive diagnosis							
			ECM	TCM	VDC/TCS /ABS	STRG	AWD /4WD	METER /M&A		
ENGINE	NG	UNKWN	–	UNKWN	UNKWN ✓	–	–	UNKWN ✓	CAN COMM CIRCUIT (U1000)	CAN COMM CIRCUIT (U1001) ✓
A/T	NG	UNKWN	UNKWN	–	–	–	–	–	–	–
ABS	NG	UNKWN	UNKWN ✓	–	–	UNKWN	UNKWN	–	CAN COMM CIRCUIT (U1000) ✓	–
ALL MODE AWD/4WD	NG	UNKWN	UNKWN ✓	–	UNKWN	–	–	–	CAN COMM CIRCUIT (U1000) ✓	–

PKIA8786E

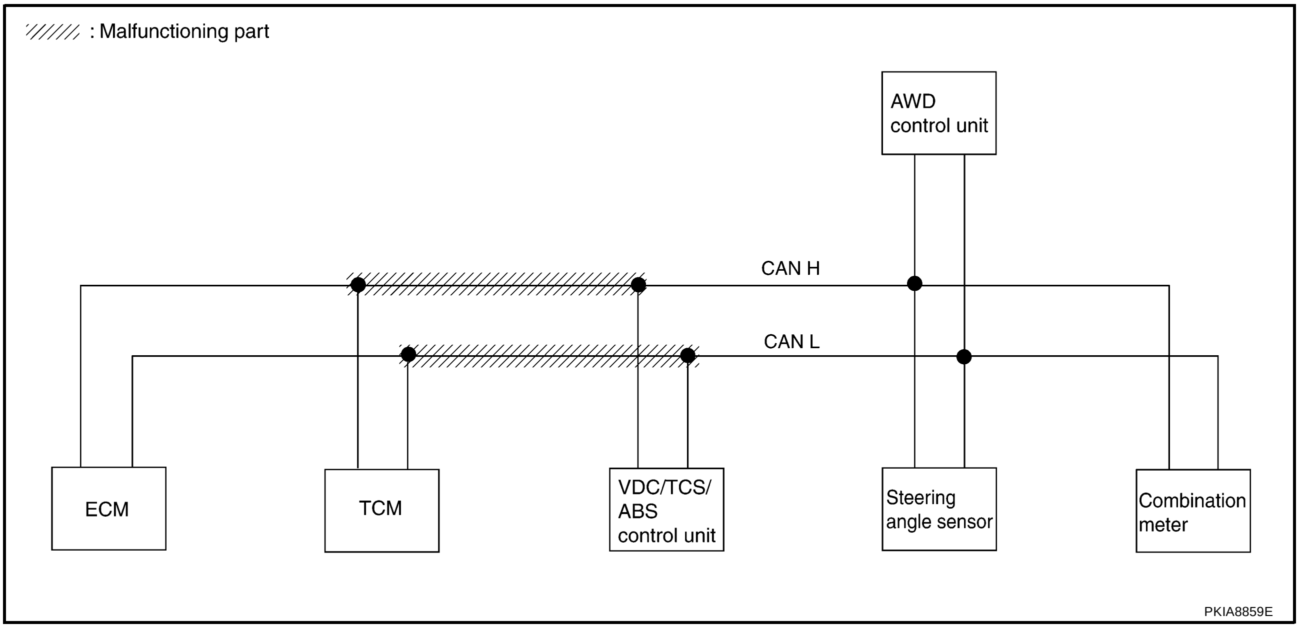

Case 2

Check harness between VDC/TCS/ABS control unit and AWD control unit. Refer to LAN-106, "Between VDC/TCS/ABS Control Unit and AWD Control Unit Circuit Inspection" .

SELECT SYSTEM screen	CAN DIAG SUPPORT MNTR								SELF-DIAG RESULTS	
	Initial diagnosis	Transmit diagnosis	Receive diagnosis							
			ECM	TCM	VDC/TCS /ABS	STRG	AWD /4WD	METER /M&A		
ENGINE	NG	UNKWN	–	UNKWN	UNKWN	–	–	UNKWN ✓	CAN COMM CIRCUIT (U1000)	CAN COMM CIRCUIT (U1001) ✓
A/T	NG	UNKWN	UNKWN	–	UNKWN	–	–	–	–	–
ABS	NG	UNKWN	UNKWN	–	–	UNKWN ✓	UNKWN ✓	–	CAN COMM CIRCUIT (U1000) ✓	–
ALL MODE AWD/4WD	NG	UNKWN	UNKWN ✓	–	UNKWN ✓	–	–	–	CAN COMM CIRCUIT (U1000) ✓	–

PKIA8787E

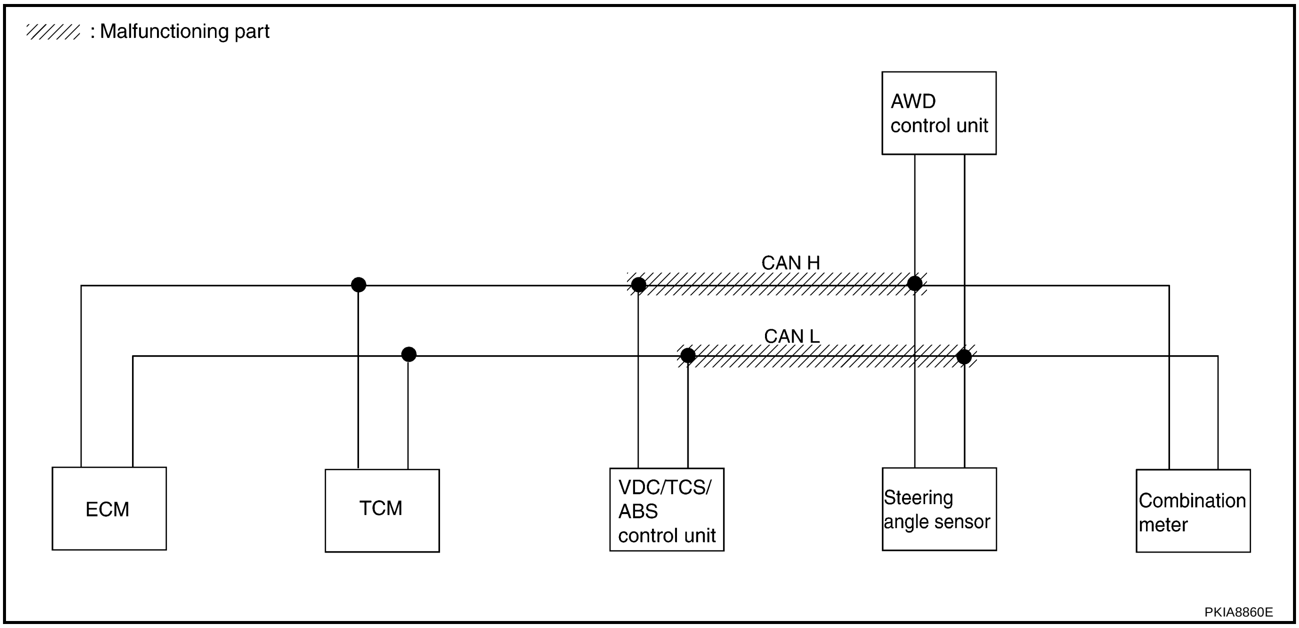

Case 3

Check ECM circuit. Refer to LAN-107, "ECM Circuit Inspection" .

SELECT SYSTEM screen	CAN DIAG SUPPORT MNTR								SELF-DIAG RESULTS	
	Initial diagnosis	Transmit diagnosis	Receive diagnosis							
			ECM	TCM	VDC/TCS/ABS	STRG	AWD/4WD	METER/M&A		
ENGINE	NG	UNKWN ✓	–	UNKWN ✓	UNKWN ✓	–	–	UNKWN ✓	CAN COMM CIRCUIT (U1000) ✓	CAN COMM CIRCUIT (U1001) ✓
A/T	NG	UNKWN	–	–	UNKWN	–	–	UNKWN	–	–
ABS	NG	UNKWN	UNKWN ✓	–	–	UNKWN	UNKWN	–	CAN COMM CIRCUIT (U1000) ✓	–
ALL MODE AWD/4WD	NG	UNKWN	UNKWN ✓	–	UNKWN	–	–	–	CAN COMM CIRCUIT (U1000) ✓	–

PKIA8788E

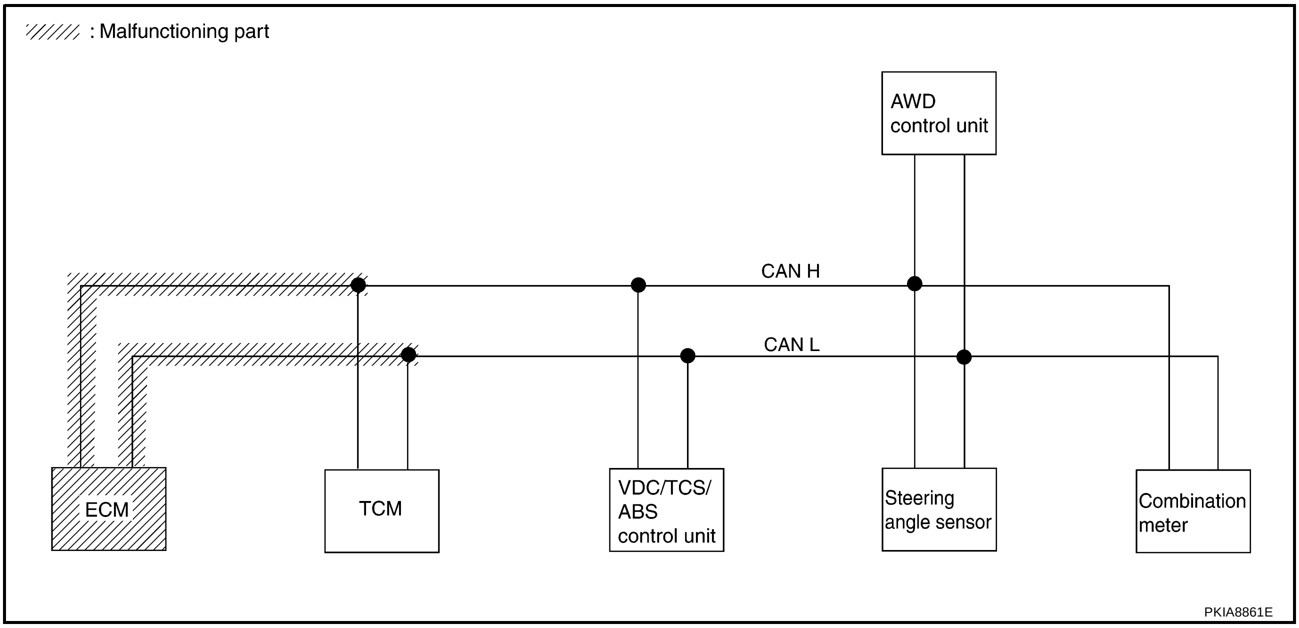

Case 4

Check TCM circuit. Refer to LAN-107, "TCM Circuit Inspection" .

SELECT SYSTEM screen	CAN DIAG SUPPORT MNTR								SELF-DIAG RESULTS	
	Initial diagnosis	Transmit diagnosis	Receive diagnosis							
			ECM	TCM	VDC/TCS /ABS	STRG	AWD /4WD	METER /M&A		
ENGINE	NG	UNKWN	–	UNKWN ✓	UNKWN	–	–	UNKWN	CAN COMM CIRCUIT (U1000) ✓	CAN COMM CIRCUIT (U1001) ✓
A/T	NG	–	–	–	–	–	–	–	–	–
ABS	NG	UNKWN	UNKWN	–	–	UNKWN	UNKWN	–	CAN COMM CIRCUIT (U1000)	–
ALL MODE AWD/4WD	NG	UNKWN	UNKWN	–	UNKWN	–	–	–	CAN COMM CIRCUIT (U1000)	–

PKIA8789E

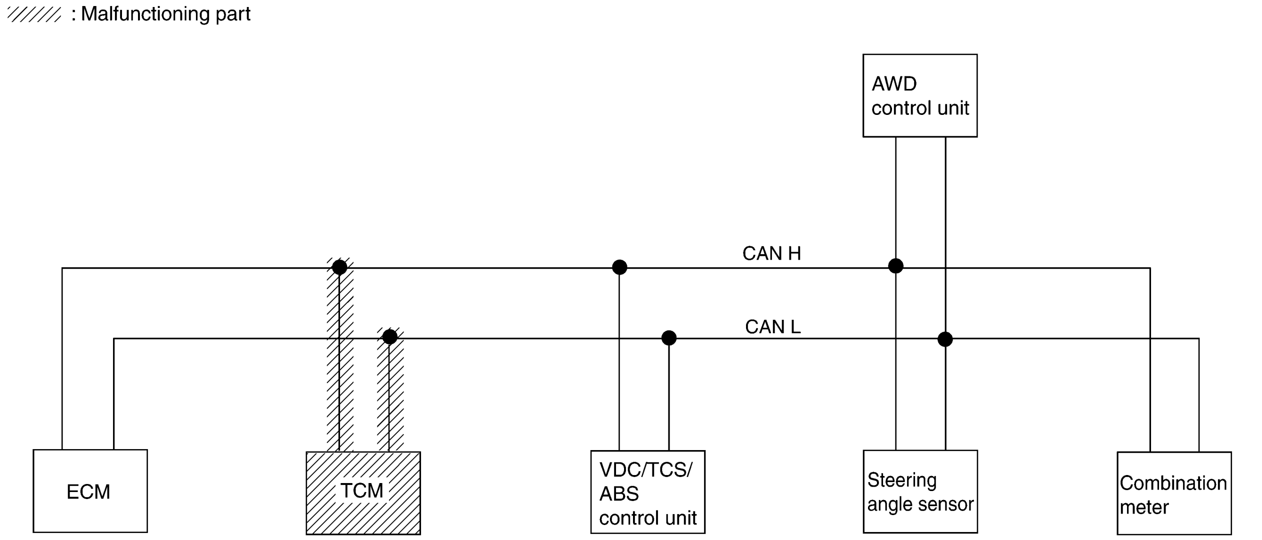

PKIA8862E

Case 5

Check VDC/TCS/ABS control unit circuit. Refer to LAN-108, "VDC/TCS/ABS Control Unit Circuit Inspection" .

SELECT SYSTEM screen	CAN DIAG SUPPORT MNTR								SELF-DIAG RESULTS	
	Initial diagnosis	Transmit diagnosis	Receive diagnosis							
			ECM	TCM	VDC/TCS/ABS	STRG	AWD/4WD	METER/M&A		
ENGINE	NG	UNKWN	–	UNKWN	UNKWN	–	–	UNKWN	CAN COMM CIRCUIT (U1000)	CAN COMM CIRCUIT (U1001)
A/T	NG	UNKWN	UNKWN	–	–	–	–	UNKWN	–	–
ABS	NG	UNKWN	UNKWN	–	–	UNKWN	UNKWN	–	CAN COMM CIRCUIT (U1000)	–
ALL MODE AWD/4WD	NG	UNKWN	UNKWN	–	UNKWN	–	–	–	CAN COMM CIRCUIT (U1000)	–

PKIA8790E

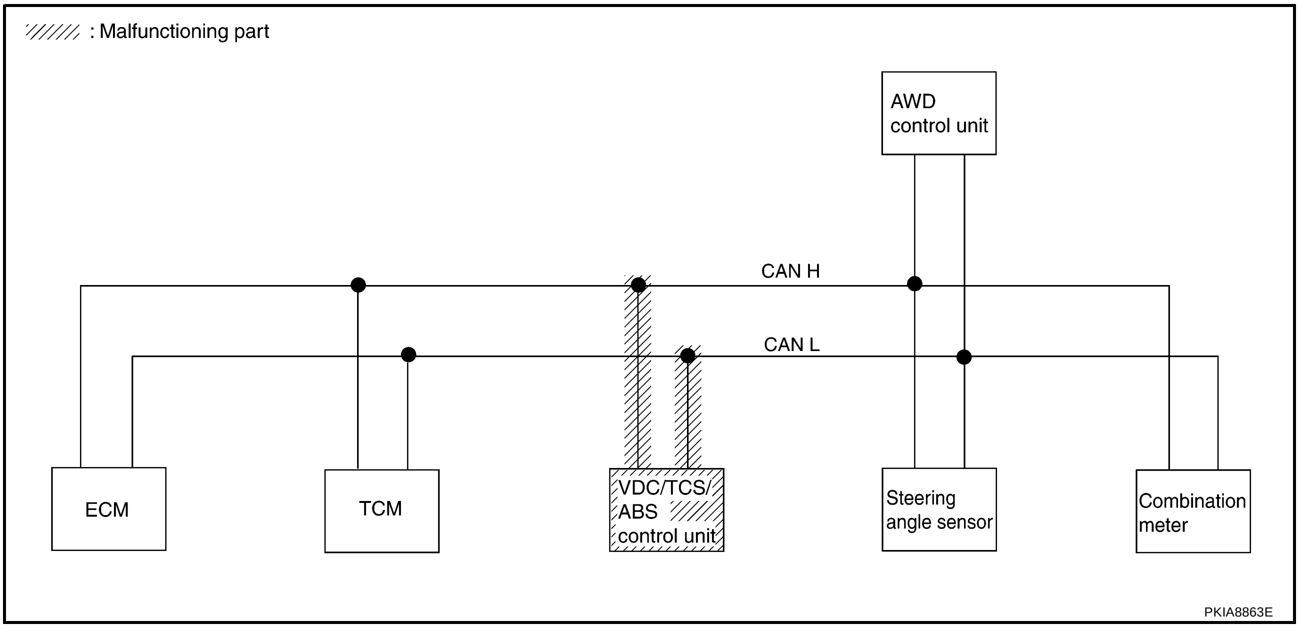

Case 6

Check steering angle sensor circuit. Refer to LAN-108, "Steering Angle Sensor Circuit Inspection" .

SELECT SYSTEM screen	CAN DIAG SUPPORT MNTR								SELF-DIAG RESULTS	
	Initial diagnosis	Transmit diagnosis	Receive diagnosis							
			ECM	TCM	VDC/TCS /ABS	STRG	AWD /4WD	METER /M&A		
ENGINE	NG	UNKWN	—	UNKWN	UNKWN	—	—	UNKWN	CAN COMM CIRCUIT (U1000)	CAN COMM CIRCUIT (U1001)
A/T	NG	UNKWN	UNKWN	—	UNKWN	—	—	UNKWN	CAN COMM CIRCUIT (U1000)	—
ABS	NG	UNKWN	UNKWN	—	—	UNKWN ✓	UNKWN	—	CAN COMM CIRCUIT (U1000) ✓	—
ALL MODE AWD/4WD	NG	UNKWN	UNKWN	—	UNKWN	—	—	—	CAN COMM CIRCUIT (U1000)	—

PKIA8791E

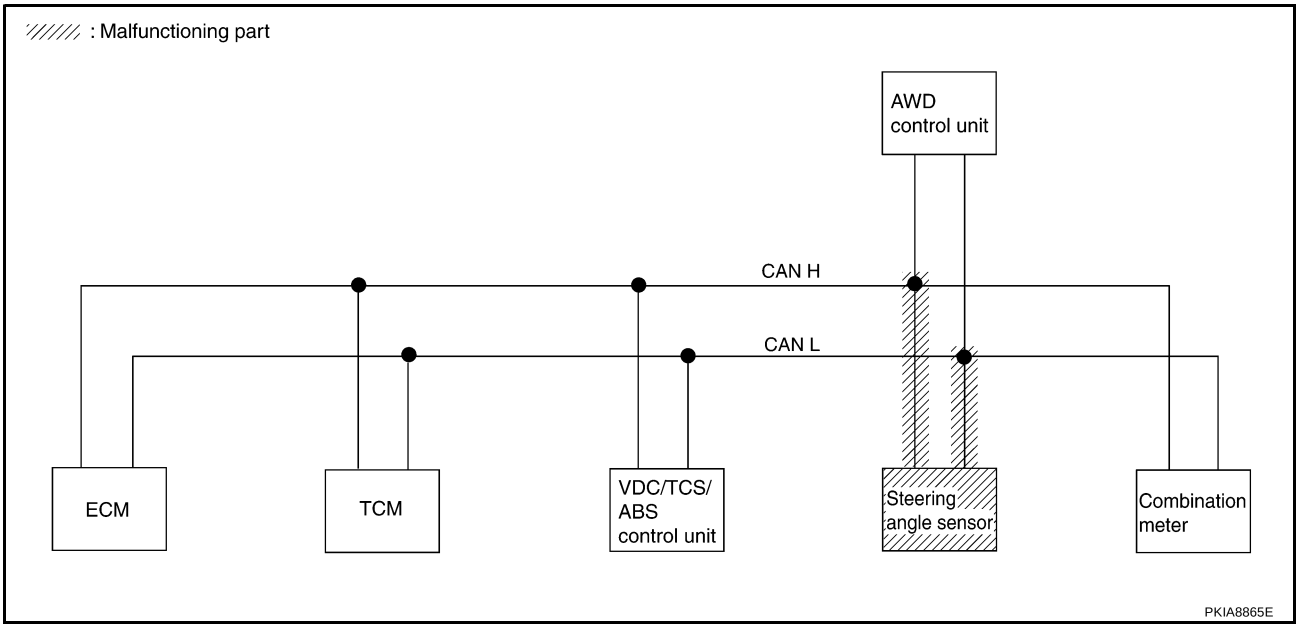

Case 7

Check AWD control unit circuit. Refer to LAN-109, "AWD Control Unit Circuit Inspection" .

SELECT SYSTEM screen	CAN DIAG SUPPORT MNTR								SELF-DIAG RESULTS	
	Initial diagnosis	Transmit diagnosis	Receive diagnosis							
			ECM	TCM	VDC/TCS/ABS	STRG	AWD/4WD	METER/M&A		
ENGINE	NG	UNKWN	—	UNKWN	UNKWN	—	—	UNKWN	CAN COMM CIRCUIT (U1000)	CAN COMM CIRCUIT (U1001)
A/T	NG	UNKWN	UNKWN	—	UNKWN	—	—	UNKWN	CAN COMM CIRCUIT (U1000)	—
ABS	NG	UNKWN	UNKWN	—	—	UNKWN	UNKWN ✓	—	CAN COMM CIRCUIT (U1000) ✓	—
ALL MODE AWD/4WD	NG	UNKWN ✓	UNKWN	—	UNKWN	—	—	—	CAN COMM CIRCUIT (U1000) ✓	—

PKIA8792E

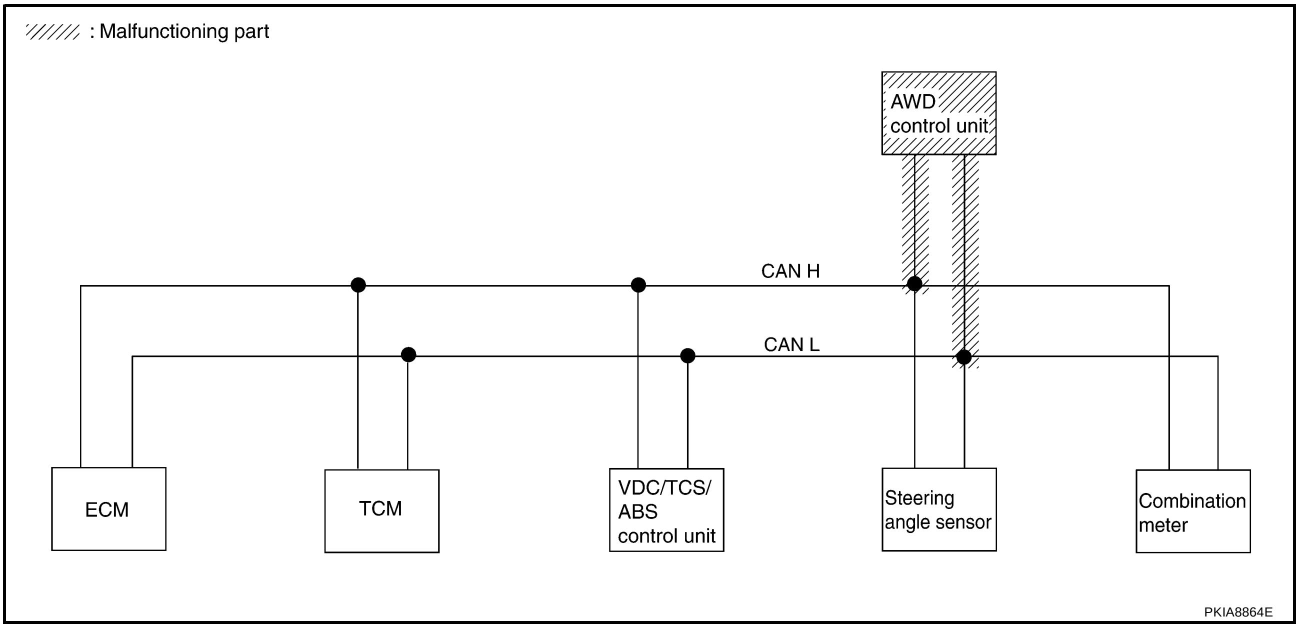

Case 8

Check combination meter circuit. Refer to LAN-109, "Combination Meter Circuit Inspection" .

SELECT SYSTEM screen	CAN DIAG SUPPORT MNTR								SELF-DIAG RESULTS	
	Initial diagnosis	Transmit diagnosis	Receive diagnosis							
			ECM	TCM	VDC/TCS /ABS	STRG	AWD /4WD	METER /M&A		
ENGINE	NG	UNKWN	—	UNKWN	UNKWN	—	—	UNKWN	CAN COMM CIRCUIT (U1000)	CAN COMM CIRCUIT (U1001)
A/T	NG	UNKWN	UNKWN	—	UNKWN	—	—	—	—	—
ABS	NG	UNKWN	UNKWN	—	—	UNKWN	UNKWN	—	CAN COMM CIRCUIT (U1000)	—
ALL MODE AWD/4WD	NG	UNKWN	UNKWN	—	UNKWN	—	—	—	CAN COMM CIRCUIT (U1000)	—

PKIA8793E

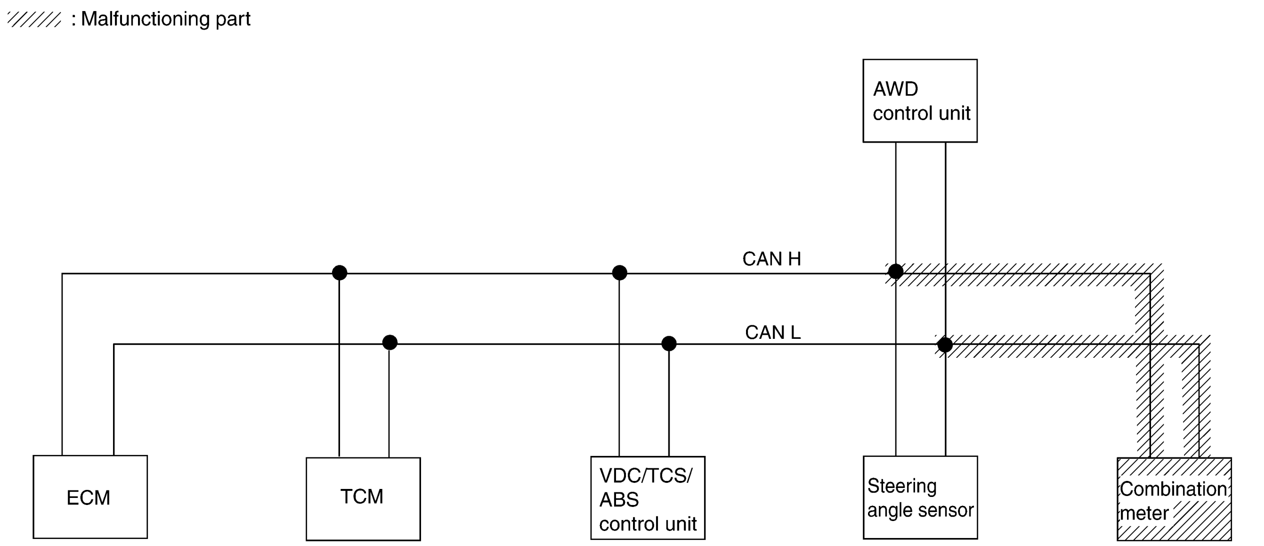

PKIA8866E

Case 9

Check CAN communication circuit. Refer to LAN-110, "CAN Communication Circuit Inspection" .

SELECT SYSTEM screen	CAN DIAG SUPPORT MNTR								SELF-DIAG RESULTS	
	Initial diagnosis	Transmit diagnosis	Receive diagnosis							
			ECM	TCM	VDC/TCS /ABS	STRG	AWD /4WD	METER /M&A		
ENGINE	NG	UNKWN ✓	–	UNKWN ✓	UNKWN ✓	–	–	UNKWN ✓	CAN COMM CIRCUIT (U1000) ✓	CAN COMM CIRCUIT (U1001) ✓
A/T	NG	–	–	–	–	–	–	–	–	–
ABS	NG ✓	UNKWN ✓	UNKWN ✓	–	–	UNKWN ✓	UNKWN ✓	–	CAN COMM CIRCUIT (U1000) ✓	–
ALL MODE AWD/4WD	NG	UNKWN ✓	UNKWN	–	UNKWN	–	–	–	CAN COMM CIRCUIT (U1000) ✓	–

PKIA8794E

Between TCM and VDC/TCS/ABS Control Unit Circuit Inspection

AKS00BLG

1. CHECK CONNECTOR

1. Turn ignition switch OFF.
2. Disconnect battery cable at negative terminal.
3. Check following terminals and connector for damage, bend and loose connection (connector side and harness side).

- Harness connector F41
- Harness connector M61
- Harness connector M75
- Harness connector E116

OK or NG

OK >> GO TO 2.

NG >> Repair terminal or connector.

2. CHECK HARNESS FOR OPEN CIRCUIT

1. Disconnect TCM connector and harness connector F41.
2. Check continuity between TCM harness connector F46 terminals 5 (G/R), 6 (GY/R) and harness connector F41 terminals 21 (G/R), 8 (GY/R).

5 (G/R) – 21 (G/R) : Continuity should exist.

6 (GY/R) – 8 (GY/R) : Continuity should exist.

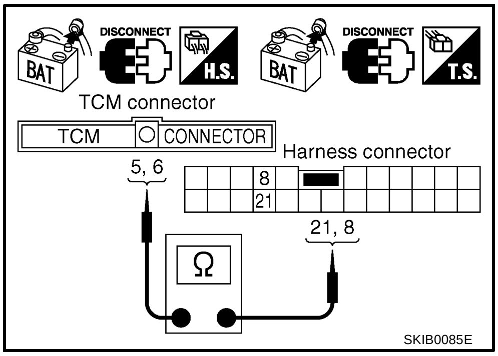

SKIB0085E

OK or NG

OK >> GO TO 3.

NG >> Repair harness.

3. CHECK HARNESS FOR OPEN CIRCUIT

1. Disconnect harness connector M75.
2. Check continuity between harness connector M61 terminals 21 (L/R), 8 (B/W) and harness connector M75 terminals 13 (L/R), 4 (B/W).

21 (L/R) – 13 (L/R) : Continuity should exist.
8 (B/W) – 4 (B/W) : Continuity should exist.

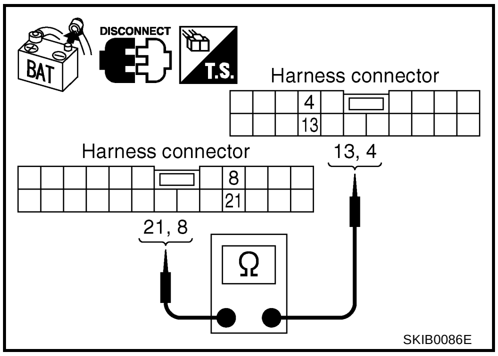

OK or NG

OK >> GO TO 4.
NG >> Repair harness.

4. CHECK HARNESS FOR OPEN CIRCUIT

1. Disconnect VDC/TCS/ABS control unit connector.
2. Check continuity between harness connector E116 terminals 13 (W), 4 (R) and VDC/TCS/ABS control unit harness connector E122 terminals 61 (W), 63 (R).

13 (W) – 61 (W) : Continuity should exist.
4 (R) – 63 (R) : Continuity should exist.

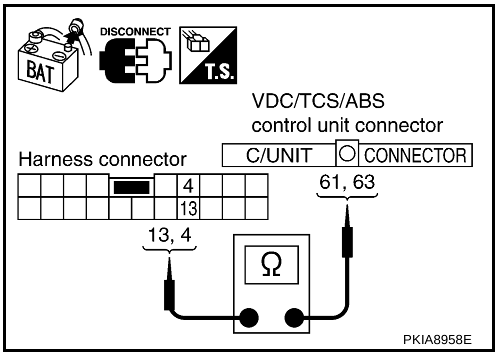

OK or NG

OK >> Connect all the connectors and diagnose again. Refer to LAN-4, "TROUBLE DIAGNOSES WORK FLOW" .
NG >> Repair harness.

Between VDC/TCS/ABS Control Unit and AWD Control Unit Circuit Inspection

AKS00BLH

1. CHECK CONNECTOR

1. Turn ignition switch OFF.
2. Disconnect battery cable at negative terminal.
3. Check following terminals and connectors for damage, bend and loose connection (connector side and harness side).
- Harness connector E116
- Harness connector M75

OK or NG

OK >> GO TO 2.
NG >> Repair terminal or connector.

2. CHECK HARNESS FOR OPEN CIRCUIT

1. Disconnect VDC/TCS/ABS control unit connector and harness connector E116.
2. Check continuity between VDC/TCS/ABS control unit harness connector E122 terminals 61 (W), 63 (R) and harness connector E116 terminals 14 (W), 5 (R).

61 (W) – 14 (W) : Continuity should exist.
63 (R) – 5 (R) : Continuity should exist.

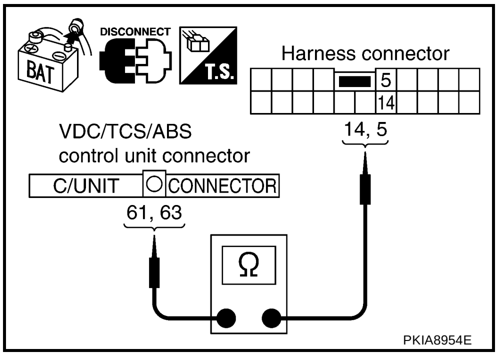

OK or NG

OK >> GO TO 3.
NG >> Repair harness.

3. CHECK HARNESS FOR OPEN CIRCUIT

1. Disconnect AWD control unit connector.
2. Check continuity between harness connector M75 terminals 14 (W), 5 (R) and AWD control unit harness connector M107 terminals 8 (W), 16 (R).

14 (W) – 8 (W) : Continuity should exist.

5 (R) – 16 (R) : Continuity should exist.

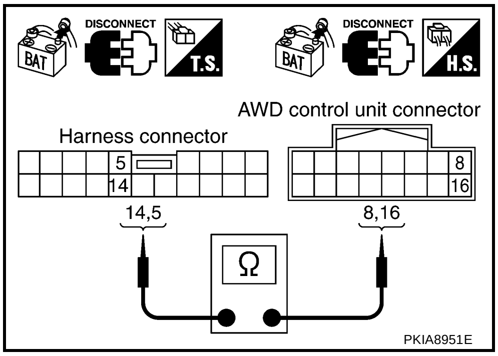

OK or NG

OK >> Connect all the connectors and diagnose again. Refer to LAN-4, "TROUBLE DIAGNOSES WORK FLOW" .

NG >> Repair harness.

ECM Circuit Inspection

AKS00BLI

1. CHECK CONNECTOR

1. Turn ignition switch OFF.
2. Disconnect battery cable at negative terminal.
3. Check following terminals and connector for damage, bend and loose connection (control module side and harness side).
   - ECM connector
   - Harness connector M61
   - Harness connector F41

OK or NG

OK >> GO TO 2.

NG >> Repair terminal or connector.

2. CHECK HARNESS FOR OPEN CIRCUIT

1. Disconnect ECM connector.
2. Check resistance between ECM harness connector M118 terminals 94 (G/R) and 86 (GY/R).

94 (G/R) – 86 (GY/R) : Approx. 108 – 132Ω

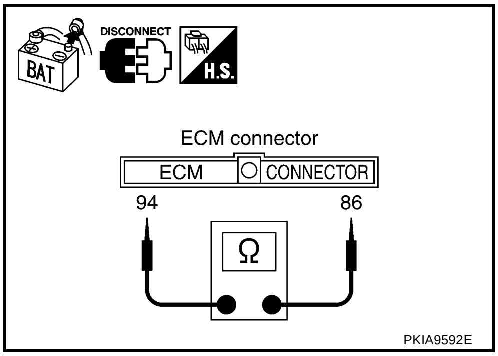

OK or NG

OK >> Replace ECM.

NG >> Repair harness between ECM and TCM.

TCM Circuit Inspection

AKS00BLJ

1. CHECK CONNECTOR

1. Turn ignition switch OFF.
2. Disconnect battery cable at negative terminal.
3. Check terminals and connector of TCM for damage, bend and loose connection (control module side and harness side).

OK or NG

OK >> GO TO 2.

NG >> Repair terminal or connector.

2. CHECK HARNESS FOR OPEN CIRCUIT

1. Disconnect TCM connector.
2. Check resistance between TCM harness connector F46 terminals 5 (G/R) and 6 (GY/R).

5 (G/R) – 6 (GY/R) : Approx. 54 – 66Ω

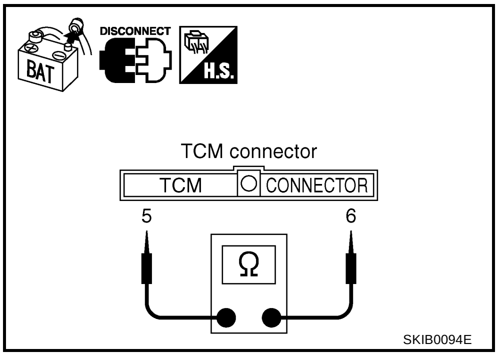

OK or NG

OK >> Replace TCM.
NG >> Repair harness between TCM and harness connector F41.

VDC/TCS/ABS Control Unit Circuit Inspection

AKS00BLK

1. CHECK CONNECTOR

1. Turn ignition switch OFF.
2. Disconnect battery cable at negative terminal.
3. Check terminals and connector of VDC/TCS/ABS control unit for damage, bend and loose connection (control unit side and harness side).

OK or NG

OK >> GO TO 2.
NG >> Repair terminal or connector.

2. CHECK HARNESS FOR OPEN CIRCUIT

1. Disconnect VDC/TCS/ABS control unit connector.
2. Check resistance between VDC/TCS/ABS control unit harness connector E122 terminals 61 (W) and 63 (R).

61 (W) – 63 (R) : Approx. 54 – 66Ω

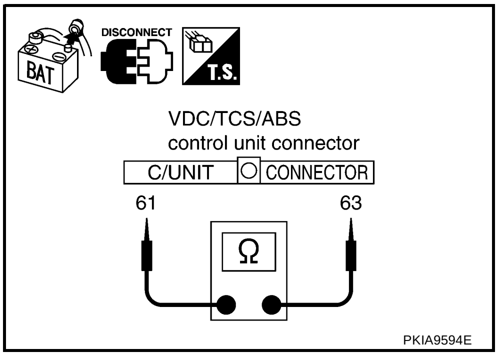

OK or NG

OK >> Replace VDC/TCS/ABS control unit.
NG >> Repair harness between VDC/TCS/ABS control unit and harness connector E116.

Steering Angle Sensor Circuit Inspection

AKS00BLL

1. CHECK CONNECTOR

1. Turn ignition switch OFF.
2. Disconnect battery cable at negative terminal.
3. Check terminals and connector of steering angle sensor for damage, bend and loose connection (sensor side and harness side).

OK or NG

OK >> GO TO 2.
NG >> Repair terminal or connector.

2. CHECK HARNESS FOR OPEN CIRCUIT

1. Disconnect steering angle sensor connector.
2. Check resistance between steering angle sensor harness connector M81 terminals 4 (W) and 5 (R).

4 (W) – 5 (R) : Approx. 54 – 66Ω

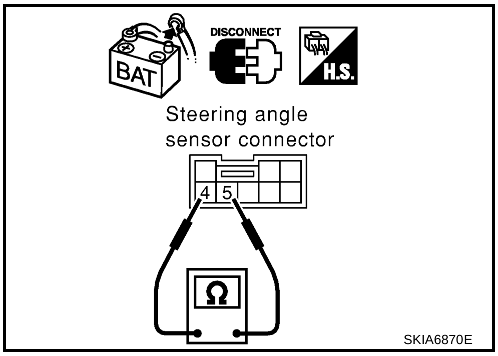

OK or NG

OK >> Replace steering angle sensor.
NG >> Repair harness between steering angle sensor and AWD control unit.

AWD Control Unit Circuit Inspection

AKS00BLM

1. CHECK CONNECTOR

1. Turn ignition switch OFF.
2. Disconnect battery cable at negative terminal.
3. Check terminals and connector of AWD control unit for damage, bend and loose connection (control unit side and harness side).

OK or NG

OK >> GO TO 2.
NG >> Repair terminal or connector.

2. CHECK HARNESS FOR OPEN CIRCUIT

1. Disconnect AWD control unit connector.
2. Check resistance between AWD control unit harness connector M107 terminals 8 (W) and 16 (R).

8 (W) – 16 (R) : Approx. 54 – 66Ω

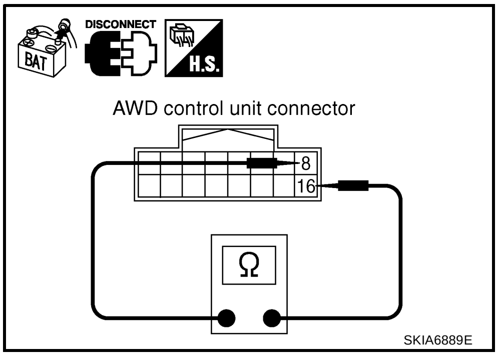

OK or NG

OK >> Replace AWD control unit.
NG >> Repair harness between AWD control unit and steering angle sensor.

Combination Meter Circuit Inspection

AKS00BLN

1. CHECK CONNECTOR

1. Turn ignition switch OFF.
2. Disconnect battery cable at negative terminal.
3. Check terminals and connector of combination meter for damage, bend and loose connection (meter side and harness side).

OK or NG

OK >> GO TO 2.
NG >> Repair terminal or connector.

2. CHECK HARNESS FOR OPEN CIRCUIT

1. Disconnect combination meter connector.
2. Check resistance between combination meter harness connector M44 terminals 22 (W) and 23 (R).

22 (W) – 23 (R) : Approx. 108 – 132Ω

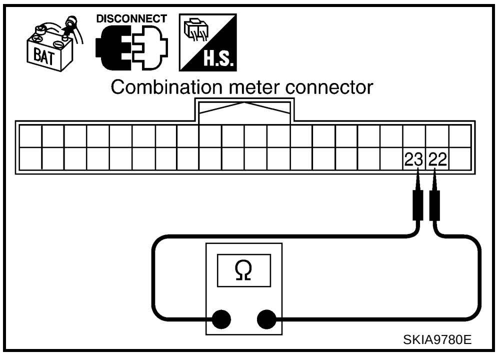

OK or NG

OK >> Replace combination meter.
NG >> Repair harness between combination meter and AWD control unit.

CAN Communication Circuit Inspection

AKS00BLO

1. CHECK CONNECTOR

1. Turn ignition switch OFF.
2. Disconnect battery cable at negative terminal.
3. Check following terminals and connector for damage, bend and loose connection (control module side, control unit side, sensor side, meter side, connector side and harness side).

- ECM
- TCM
- VDC/TCS/ABS control unit
- Steering angle sensor
- AWD control unit
- Combination meter
- Between ECM and combination meter

OK or NG

OK >> GO TO 2.
NG >> Repair terminal or connector.

2. CHECK HARNESS FOR SHORT CIRCUIT

1. Disconnect ECM connector and harness connector M61.
2. Check continuity between ECM harness connector M118 terminals 94 (G/R) and 86 (GY/R).

94 (G/R) – 86 (GY/R) : Continuity should not exist.

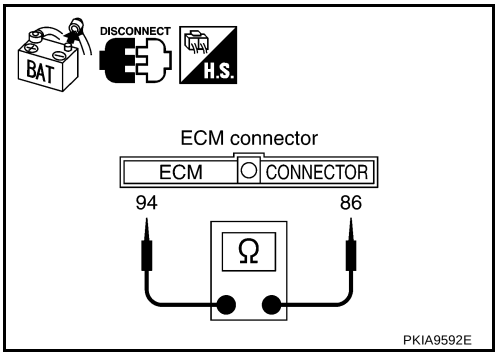

OK or NG

OK >> GO TO 3.
NG >> Repair harness between ECM and harness connector M61.

3. CHECK HARNESS FOR SHORT CIRCUIT

Check continuity between ECM harness connector M118 terminals 94 (G/R), 86 (GY/R) and ground.

94 (G/R) – Ground : Continuity should not exist.

86 (GY/R) – Ground : Continuity should not exist.

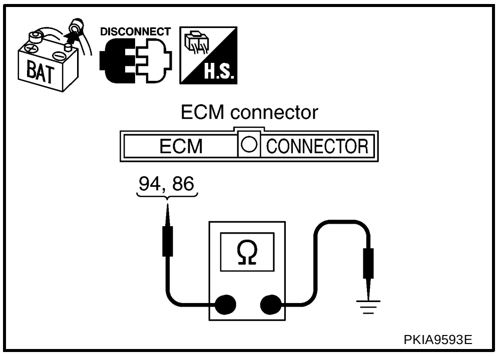

OK or NG

OK >> GO TO 4.

NG >> Repair harness between ECM and harness connector M61.

4. CHECK HARNESS FOR SHORT CIRCUIT

1. Disconnect TCM connector.
2. Check continuity between TCM harness connector F46 terminals 5 (G/R) and 6 (GY/R).

5 (G/R) – 6 (GY/R) : Continuity should not exist.

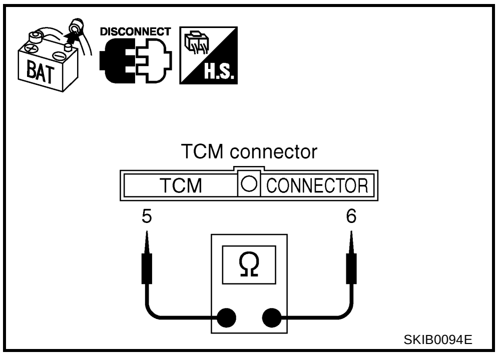

OK or NG

OK >> GO TO 5.

NG >> Repair harness between TCM and harness connector F41.

5. CHECK HARNESS FOR SHORT CIRCUIT

Check continuity between TCM harness connector F46 terminals 5 (G/R), 6 (GY/R) and ground.

5 (G/R) – Ground : Continuity should not exist.

6 (GY/R) – Ground : Continuity should not exist.

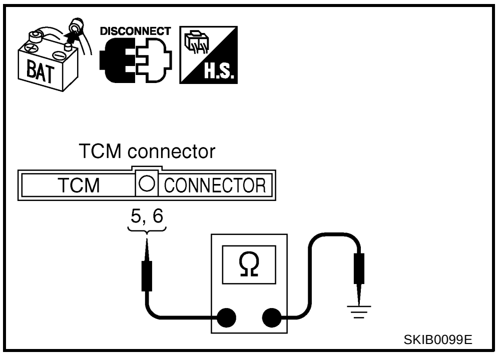

OK or NG

OK >> GO TO 6.

NG >> Repair harness between TCM and harness connector F41.

6. CHECK HARNESS FOR SHORT CIRCUIT

1. Disconnect harness connector M75.
2. Check continuity between harness connector M61 terminals 21 (L/R) and 8 (B/W).

21 (L/R) – 8 (B/W) : Continuity should not exist.

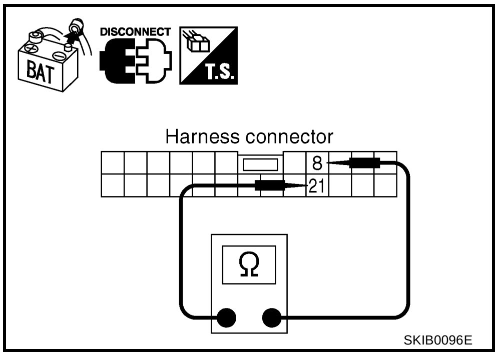

OK or NG

OK >> GO TO 7.

NG >> Repair harness between harness connector M61 and harness connector M75.

7. CHECK HARNESS FOR SHORT CIRCUIT

Check continuity between harness connector M61 terminals 21 (L/R), 8 (B/W) and ground.

21 (L/R) – Ground : Continuity should not exist.

8 (B/W) – Ground : Continuity should not exist.

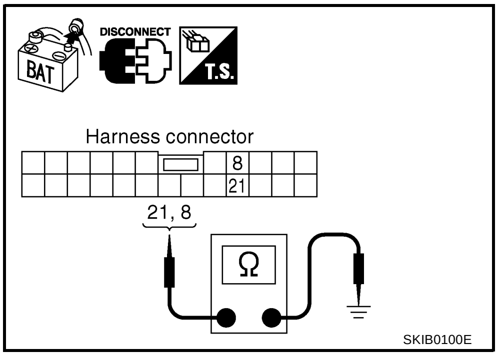

OK or NG

OK >> GO TO 8.

NG >> Repair harness between harness connector M61 and harness connector M75.

8. CHECK HARNESS FOR SHORT CIRCUIT

1. Disconnect VDC/TCS/ABS control unit connector.
2. Check continuity between VDC/TCS/ABS control unit harness connector E122 terminals 61 (W) and 63 (R).

61 (W) – 63 (R) : Continuity should not exist.

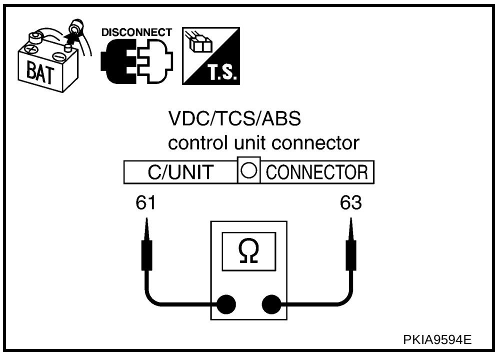

OK or NG

OK >> GO TO 9.

NG >> Repair harness between VDC/TCS/ABS control unit and harness connector E116.

9. CHECK HARNESS FOR SHORT CIRCUIT

Check continuity between VDC/TCS/ABS control unit harness connector E122 terminals 61 (W), 63 (R) and ground.

61 (W) – Ground : Continuity should not exist.

63 (R) – Ground : Continuity should not exist.

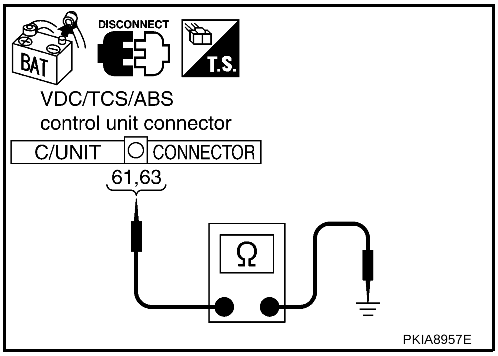

OK or NG

OK >> GO TO 10.

NG >> Repair harness between VDC/TCS/ABS control unit and harness connector E116.

10. CHECK HARNESS FOR SHORT CIRCUIT

1. Disconnect following connectors.
- Steering angle sensor connector
- AWD control unit connector
- Combination meter connector
2. Check continuity between combination meter harness connector M44 terminals 22 (W) and 23 (R).

22 (W) – 23 (R) : Continuity should not exist.

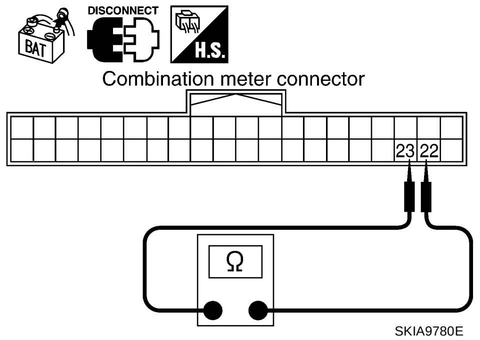

SKIA9780E

OK or NG

OK >> GO TO 11.
NG >> Check the following harness. If any harness is damaged, repair the harness.
- Harness between combination meter and steering angle sensor
- Harness between combination meter and AWD control unit
- Harness between combination meter and harness connector M75

11. CHECK HARNESS FOR SHORT CIRCUIT

Check continuity between combination meter harness connector M44 terminals 22 (W), 23 (R) and ground.

22 (W) – Ground : Continuity should not exist.
23 (R) – Ground : Continuity should not exist.

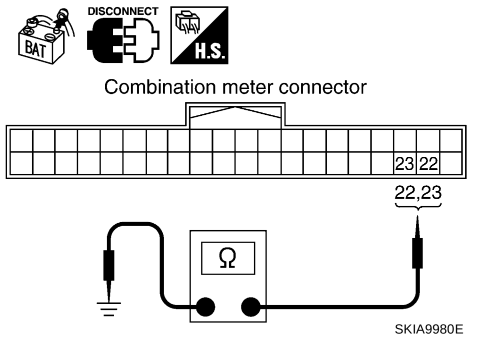

SKIA9980E

OK or NO

OK >> GO TO 12.
NG >> Check the following harness. If any harness is damaged, repair the harness.
- Harness between combination meter and steering angle sensor
- Harness between combination meter and AWD control unit
- Harness between combination meter and harness connector M75

12. CHECK ECM AND COMBINATION METER INTERNAL CIRCUIT

1. Remove ECM and combination meter from vehicle.
2. Check resistance between ECM terminals 94 and 86.
3. Check resistance between combination meter terminals 22 and 23.

Unit	Terminal	Resistance (Ω) (Approx.)
ECM	94 – 86	108 – 132
Combination meter	22 – 23	

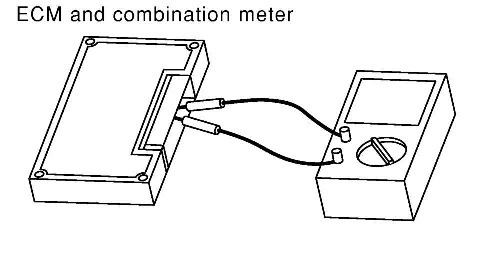

PKIA0830E

OK or NG

OK >> GO TO 13.
NG >> Replace ECM and/or combination meter.

13. CHECK SYMPTOM

1. Fill in described symptoms on the column “Symptom” in the check sheet.
2. Connect all connectors, and then make sure that the symptom is reproduced.

OK or NG

OK >> GO TO 14.
NG >> Refer to LAN-11, "Example of Filling in Check Sheet When Initial Conditions Are Not Reproduced"
.

14. CHECK UNIT REPRODUCIBILITY

Performs the following procedure for each unit, and then perform reproducibility test.

1. Turn ignition switch OFF.
2. Disconnect battery cable at negative terminal.
3. Disconnect the unit connector.
4. Connect battery cable at negative terminal.
5. Make sure that the symptom filled in the “Symptom” of the check sheet is reproduced. (Do not confuse it with the symptom related to removed unit.)
6. Make sure that the same symptom is reproduced.

- TCM
- VDC/TCS/ABS control unit
- Steering angle sensor
- AWD control unit
- ECM
- Combination meter

Check results

Reproduce>>Install removed unit, and then check the other units.
Not reproduced>>Replace removed unit.